1-4-2014

ECUelectrónica

# MANUAL CURSO DE REPARACION ECU (FORD)

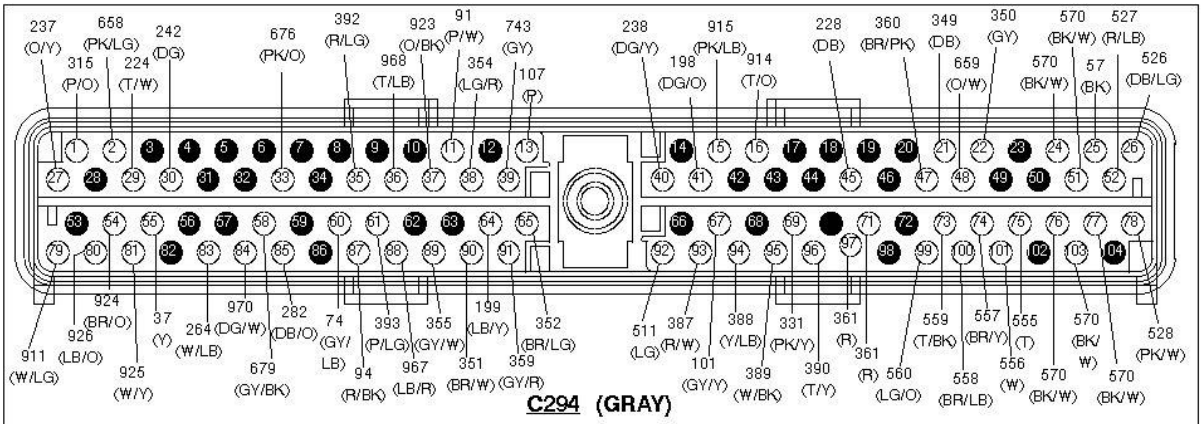


## POWERTRAIN CONTROL MODULE (PCM) (3.8L)

| PIN | CIRCUIT | CIRCUIT FUNCTION | PIN | CIRCUIT | CIRCUIT FUNCTION |
|---|---|---|---|---|---|
| 1 | 315 (P/O) | Shift Solenoid #2 (SS2) | 18 | — | NOT USED |
| 2 | 658 (PK/LG) | Malfunction Indicator Lamp (MIL) | 19 | — | NOT USED |
| 3 | — | NOT USED | 20 | — | NOT USED |
| 4 | — | NOT USED | 21 | 349 (DB) | Crankshaft Position (CKP) Sensor (+) |
| 5 | — | NOT USED | 22 | 350 (GY) | Crankshaft Position (CKP) Sensor (-) |
| 6 | — | NOT USED | 23 | — | NOT USED |
| 7 | — | NOT USED | 24 | 570 (BK/W) | Power Ground (PWRGND) |
| 8 | — | NOT USED | 25 | 57 (BK) | Case Ground |
| 9 | — | NOT USED | 26 | 526 (DB/LG) | To Coil Driver 1 (A) |
| 10 | — | NOT USED | 27 | 237 (O/Y) | Shift Solenoid #1 (SS1) |
| 11 | 91 (P/W) | Evaporative Emission (EVAP) Purge Flow Sensor | 28 | — | NOT USED |
| 12 | — | NOT USED | 29 | 224 (T/W) | Transmission Control Switch Input |
| 13 | 107 (P) | Data Link Connector (DLC) Reprogramming Power Supply Pin | 30 | 242 (DG) | Octane Adjust Input |
| | | | 31 | — | NOT USED |
| 14 | — | NOT USED | 32 | — | NOT USED |
| 15 | 915 (PK/LB) | Data Link Connector (DLC) Bus (−) | 33 | 676 (PK/O) | Vehicle Speed Sensor (VSS) Input (−) |
| 16 | 914 (T/O) | Data Link Connector (DLC) Bus (+) | 34 | — | NOT USED |
| 17 | — | NOT USED | | | |

| PIN | CIRCUIT | CIRCUIT FUNCTION | PIN | CIRCUIT | CIRCUIT FUNCTION |
|---|---|---|---|---|---|
| 35 | 392 (R/LG) | Right Rear Heated Oxygen Sensor (HO2S) | 71 | 361 (R) | Power (VPWR) |
| 36 | 968 (T/LB) | Mass Air Flow (MAF) Sensor Return | 72 | — | NOT USED |
| 37 | 923 (O/BK) | Transmission Fluid Temperature (TFT) Sensor | 73 | 559 (T/BK) | Fuel Injector #5 |
| 38 | 354 (LG/R) | Engine Coolant Temperature Sensor Input | 74 | 557 (BR/Y) | Fuel Injector #3 |
| 39 | 743 (GY) | Intake Air Temperature (IAT) Sensor Input | 75 | 555 (T) | Fuel Injector #1 |
| 40 | 238 (DG/Y) | Fuel Pump Monitor Input | 76 | 570 (BK/W) | Power Ground (PWRGND) |
| 41 | 198 (DG/O) | Air Conditioning Cycling Switch (ACCS) Input | 77 | 570 (BK/W) | Power Ground (PWRGND) |
| 42 | — | NOT USED | 78 | 528 (PK/W) | To Coil Driver 3 (C) |
| 43 | — | NOT USED | 79 | 911 (W/LG) | Transmission Control Indicator Lamp (TCIL) |
| 44 | — | NOT USED | 80 | 926 (LB/O) | Fuel Pump Relay Output |
| 45 | 228 (DB) | Low Fan Control Output | 81 | 925 (W/Y) | Electronic Pressure Control (EPC) |
| 46 | — | NOT USED | 82 | — | NOT USED |
| 47 | 360 (BR/PK) | EGR Vacuum Regulator (EVR) Solenoid | 83 | 264 (W/LB) | Idle Air Control (IAC) Valve |
| 48 | 659 (O/W) | Ignition Diagnostic Monitor (IDM) | 84 | 970 (DG/W) | Output Shaft Speed Sensor (OSS) |
| 49 | — | NOT USED | 85 | 282 (DB/O) | Camshaft Position (CMP) Sensor |
| 50 | — | NOT USED | 86 | — | NOT USED |
| 51 | 570 (BK/W) | Power Ground | 87 | 94 (R/BK) | Left Front Heated Oxygen Sensor (HO2S) |
| 52 | 527 (R/LB) | To Coil Drive 2 (B) | 88 | 967 (LB/R) | Mass Air Flow (MAF) Sensor |
| 53 | — | NOT USED | 89 | 355 (GY/W) | Throttle Position (TP) Sensor |
| 54 | 924 (BR/O) | Torque Converter Clutch (TCC) Solenoid | 90 | 351 (BR/W) | Reference Voltage (VREF) |
| 55 | 37 (Y) | B+ Keep Alive Power (KAPWR) | 91 | 359 (GY/R) | Signal Return (SIGRTN) |
| 56 | — | NOT USED | 92 | 511 (LG) | Brake On/Off (BOO) Switch Input |
| 57 | — | NOT USED | 93 | 387 (R/W) | Right Front Heated Oxygen Sensor |
| 58 | 679 (GY/BK) | Vehicle Speed Sensor (VSS) (+) | 94 | 388 (Y/LB) | Left Front Heated Oxygen Sensor |
| 59 | — | NOT USED | 95 | 389 (W/BK) | Right Rear Heated Oxygen Sensor (HO2S) |
| 60 | 74 (GY/LB) | Right Front Heated Oxygen Sensor (HO2S) | 96 | 390 (T/Y) | Left Rear Heated Oxygen Sensor (HO2S) Output |
| 61 | 393 (P/LG) | Left Rear Heated Oxygen Sensor (HO2S) | 97 | 361 (R) | Vehicle Power (VPWR) |
| 62 | — | NOT USED | 98 | — | NOT USED |
| 63 | — | NOT USED | 99 | 560 (LG/O) | Fuel Injector #6 Output |
| 64 | 199 (LB/Y) | Transmission Range (TR) Sensor Input | 100 | 558 (BR/LB) | Fuel Injector #4 Output |
| 65 | 352 (BR/LG) | Differential Pressure Feedback EGR (DPFE) Sensor | 101 | 556 (W) | Fuel Injector #2 Output |
| | | | 102 | — | NOT USED |
| 66 | — | NOT USED | 103 | 570 (BK/W) | Power Ground (PWRGND) |
| 67 | 101 (GY/Y) | Evaporative Emission (EVAP) Canister Purge Solenoid | 104 | — | NOT USED |
| 68 | — | NOT USED | | | |
| 69 | 331 (PK/Y) | WOT A/C Cutout Relay | | | |
| 70 | — | NOT USED | | | |

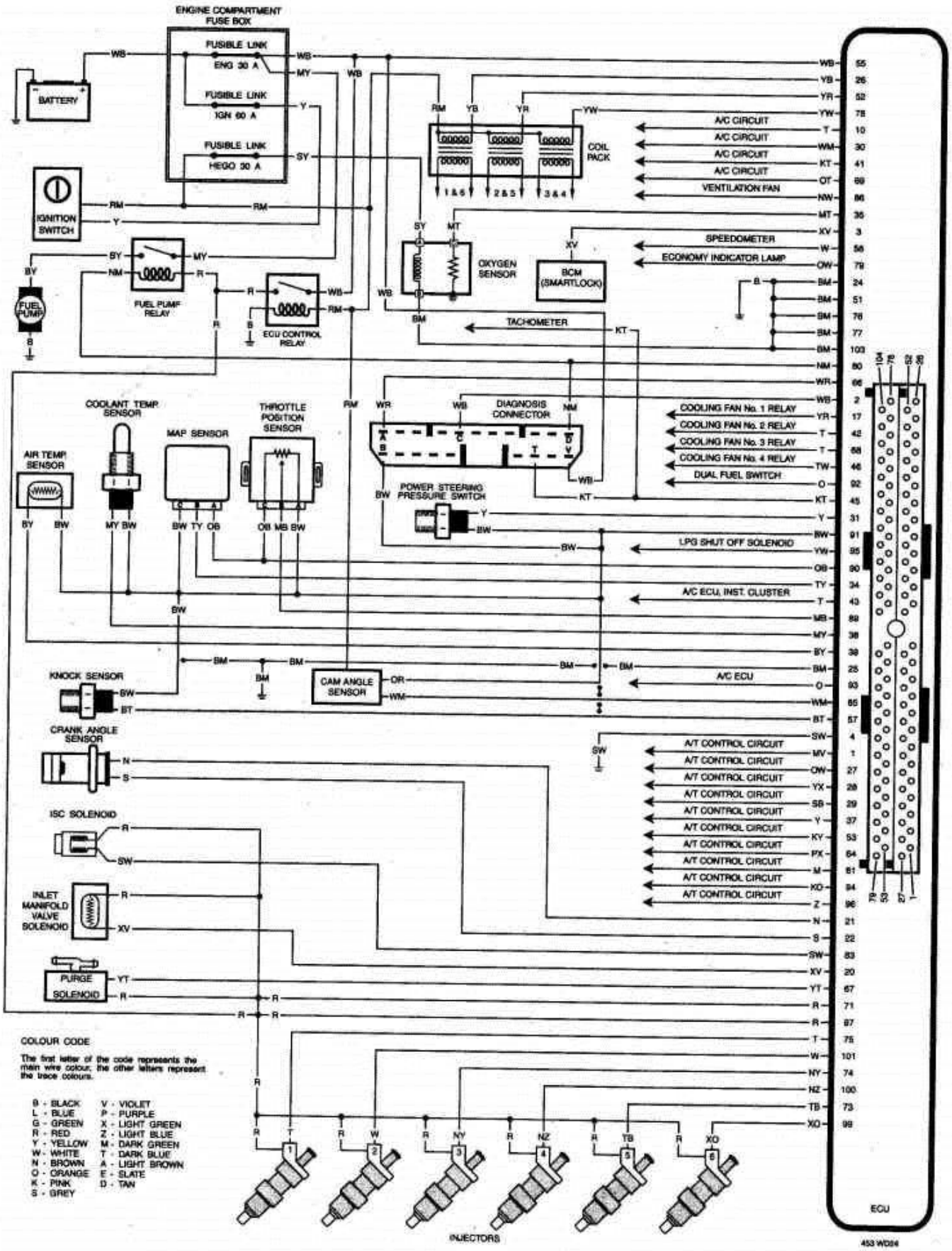


**Fuel and engine management system circuit diagram.**

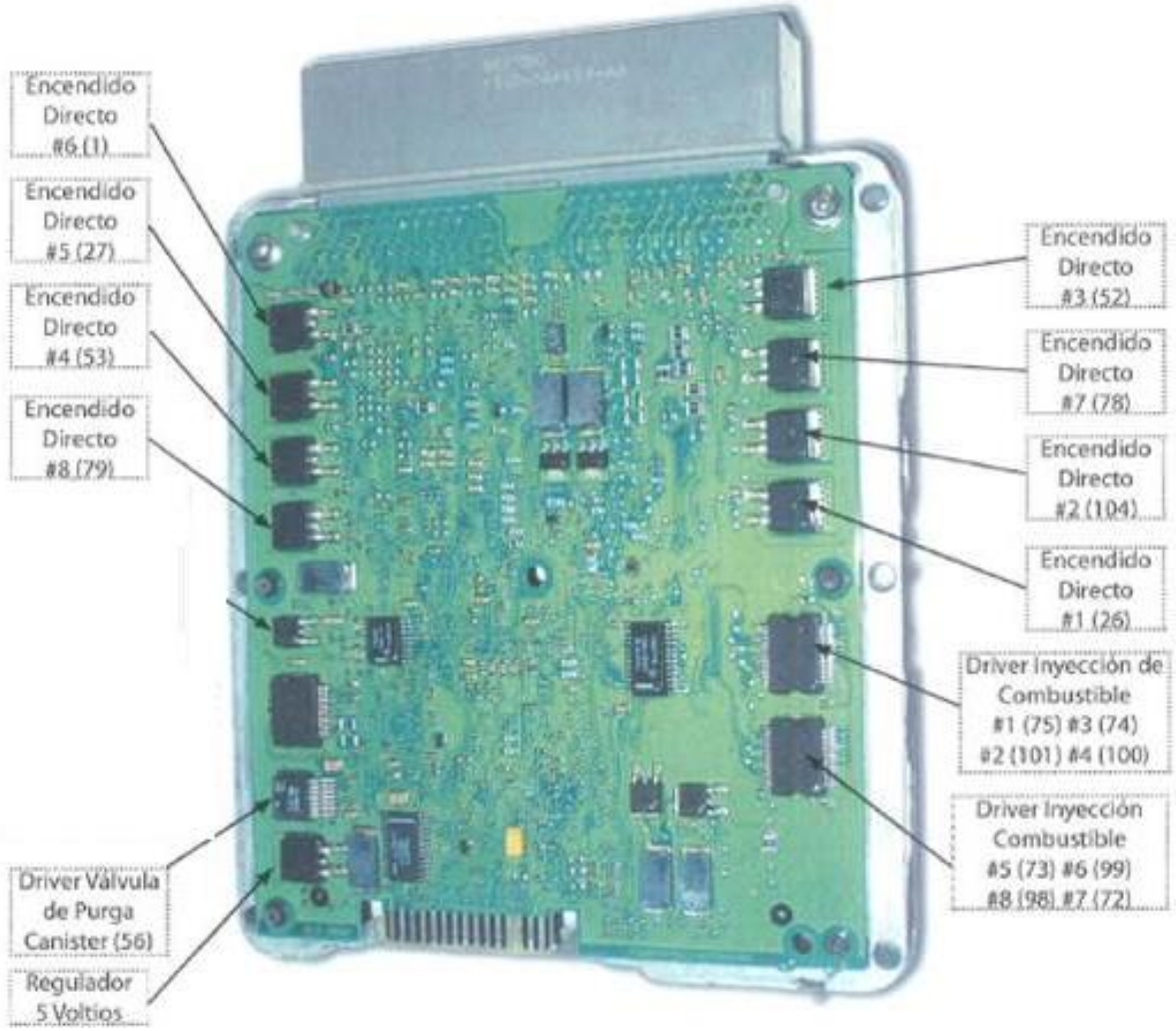
Encendido Directo #6 (1)
Encendido Directo #5 (27)
Encendido Directo #4 (53)
Encendido Directo #8 (79)
Driver Válvula de Purga Canister (56)
Regulador 5 Voltios
Encendido Directo #3 (52)
Encendido Directo #7 (78)
Encendido Directo #2 (104)
Encendido Directo #1 (26)
Driver Inyección de Combustible #1 (75) #3 (74) #2 (101) #4 (100)
Driver Inyección Combustible #5 (73) #6 (99) #8 (98) #7 (72)

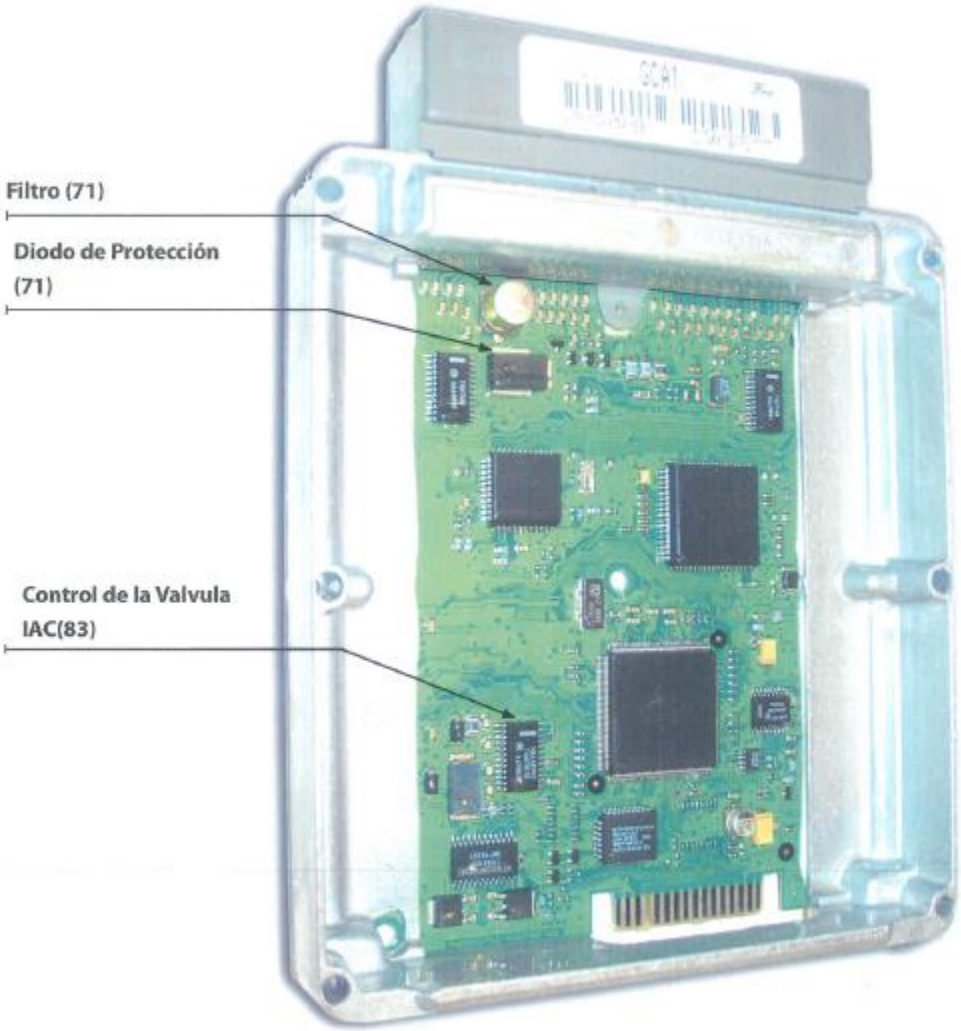
Filtro (71)
Diodo de Protección (71)
Control de la Valvula IAC(83)

Diagrama alimentación 5v sensores

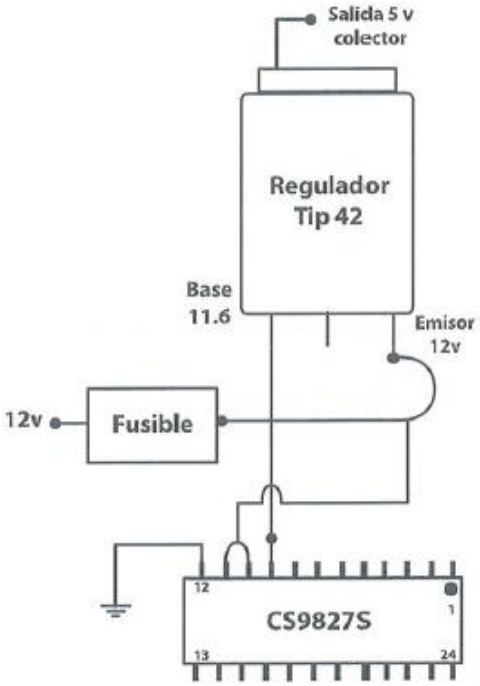


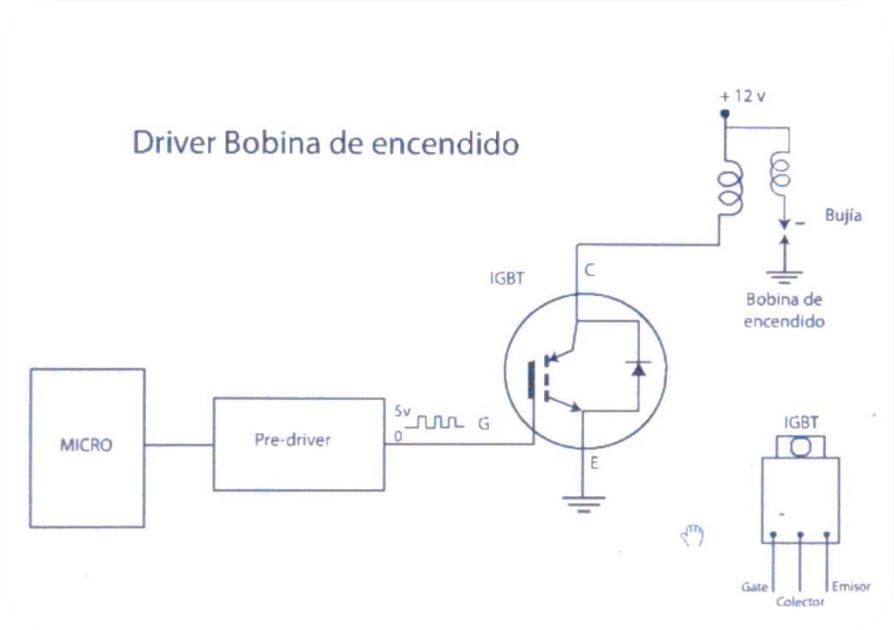

# DIAGRAMA DE SIMULADOR DE PRUEBA

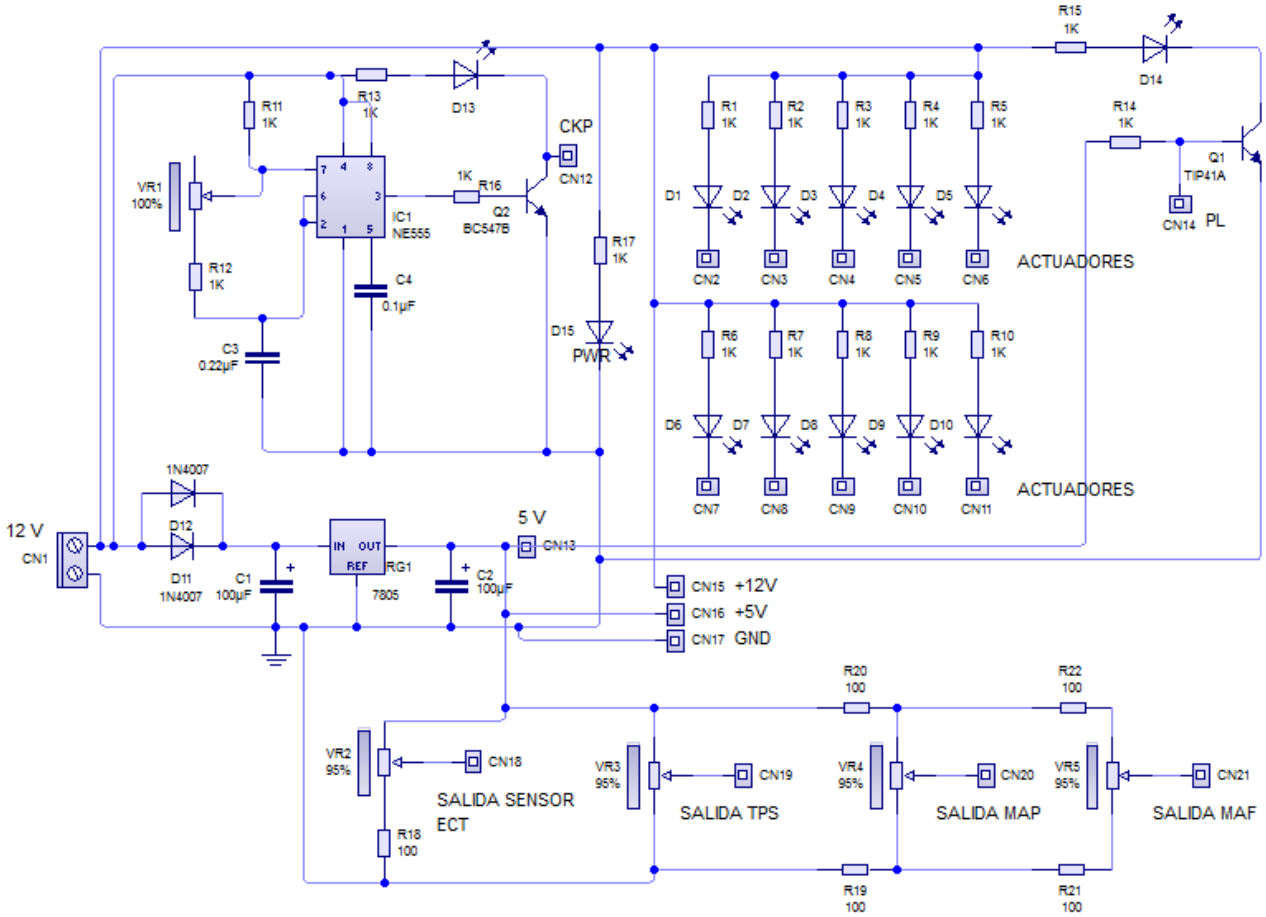


| Name | Quantity |
|---|---|
| 0.1µF Capacitor | 1 |
| 0.22µF Capacitor | 1 |
| 100 Resistor (1/4W) | 5 |
| 100µF Electrolytic Capacitor | 2 |
| 10K Potentiometer | 3 |
| 1K Resistor (1/4W) | 17 |
| 1N4007 Diode | 2 |
| 2 pin Terminal Block | 1 |
| 500K Potentiometer | 1 |
| 5K Potentiometer | 1 |
| 7805 (5V, 1A) Voltage Regulator | 1 |
| BC547B NPN Transistor | 1 |
| LED (Red) | 13 |
| NE555 Bipolar Timer | 1 |
| TIP41A NPN Transistor | 1 |

SENSORES CKP Y CMP INDUCTIVOS

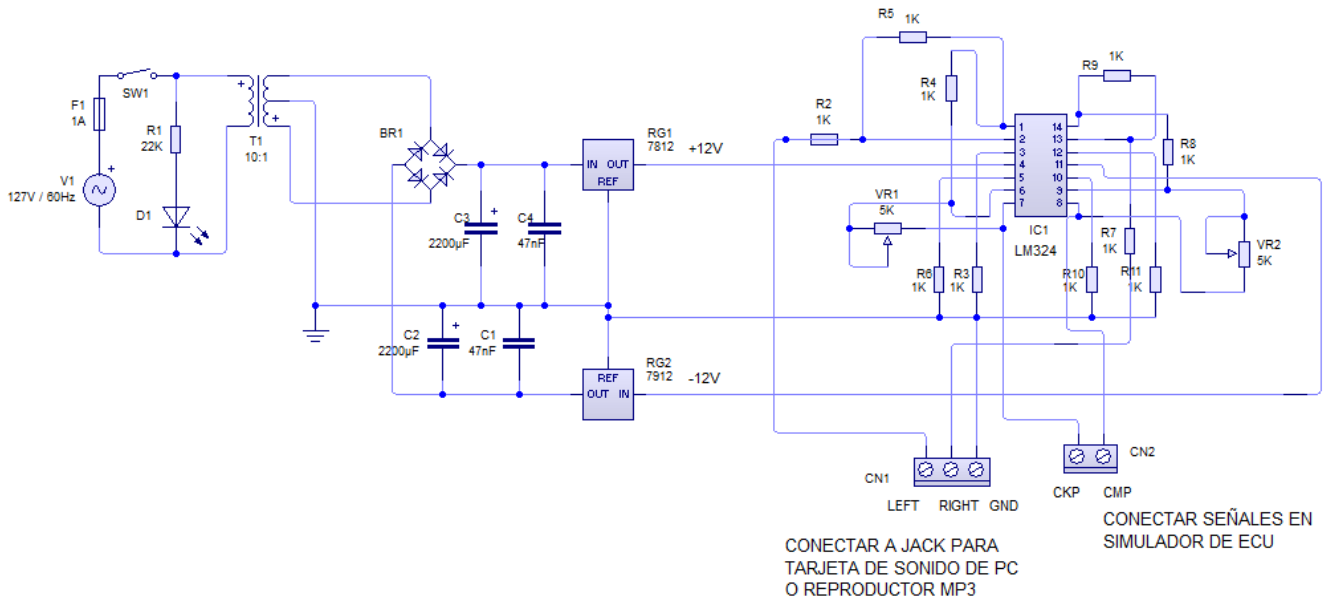


| Name | Quantity |
|---|---|
| 10:1 Transformer | 1 |
| 1A Fuse | 1 |
| 1K Resistor (1/4W) | 10 |
| 2 pin Terminal Block | 1 |
| 2200µF Electrolytic Capacitor | 2 |
| 22K Resistor (1/4W) | 1 |
| 3 pin Terminal Block | 1 |
| 47nF Capacitor | 2 |
| 5K Potentiometer | 2 |
| 7812 (12V, 1A) Voltage Regulator | 1 |
| 7912 (-12V, 1A) Voltage Regulator | 1 |
| Bridge Rectifier (Ideal) | 1 |
| LED (Red) | 1 |
| SPST Switch | 1 |
| INTEGRADO LM324 | 1 |

# PRUEBA DE COMPONENTES

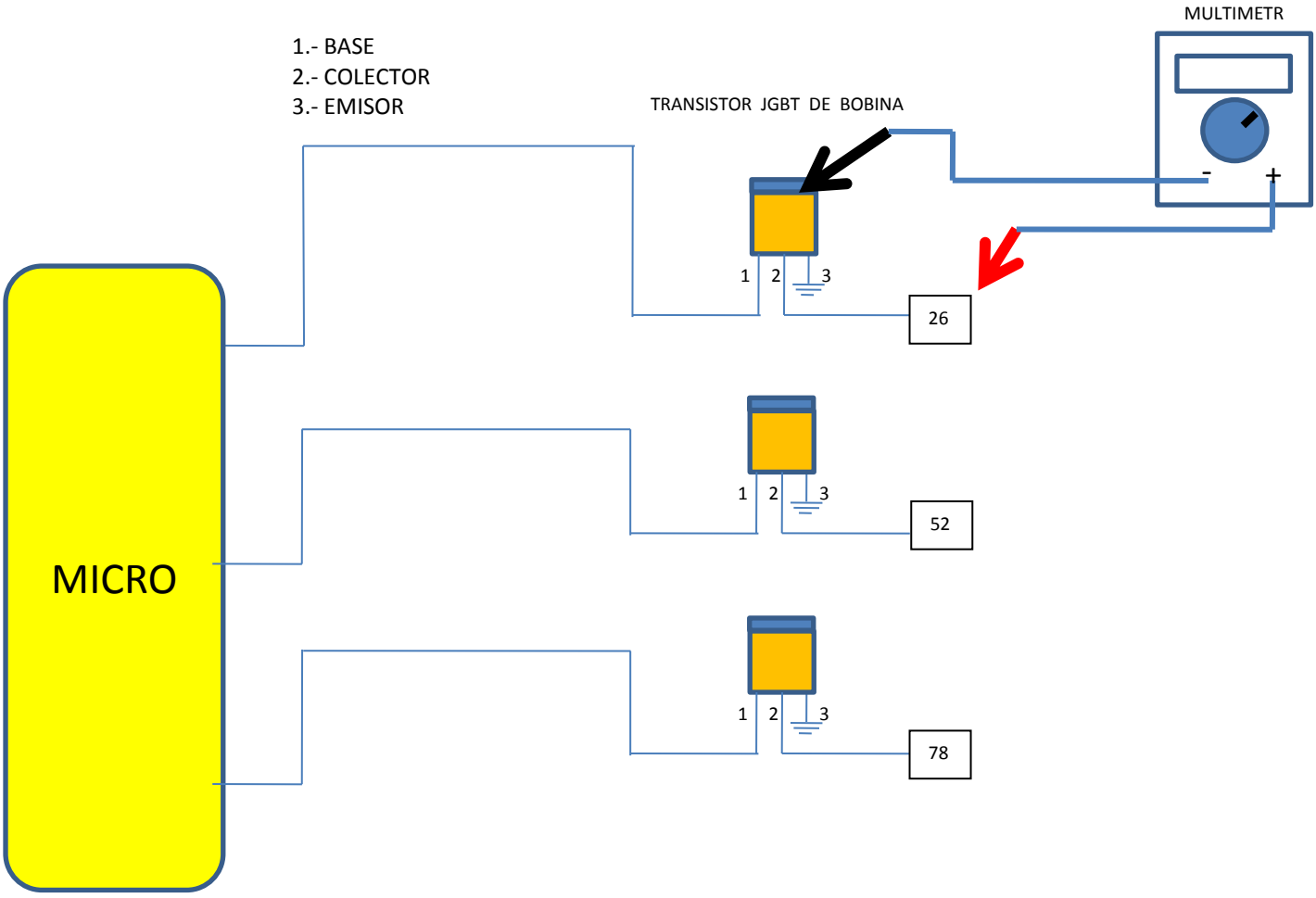

# OTRAS COMPUTAORAS

## EEC-VI FORD DE 92 PINES

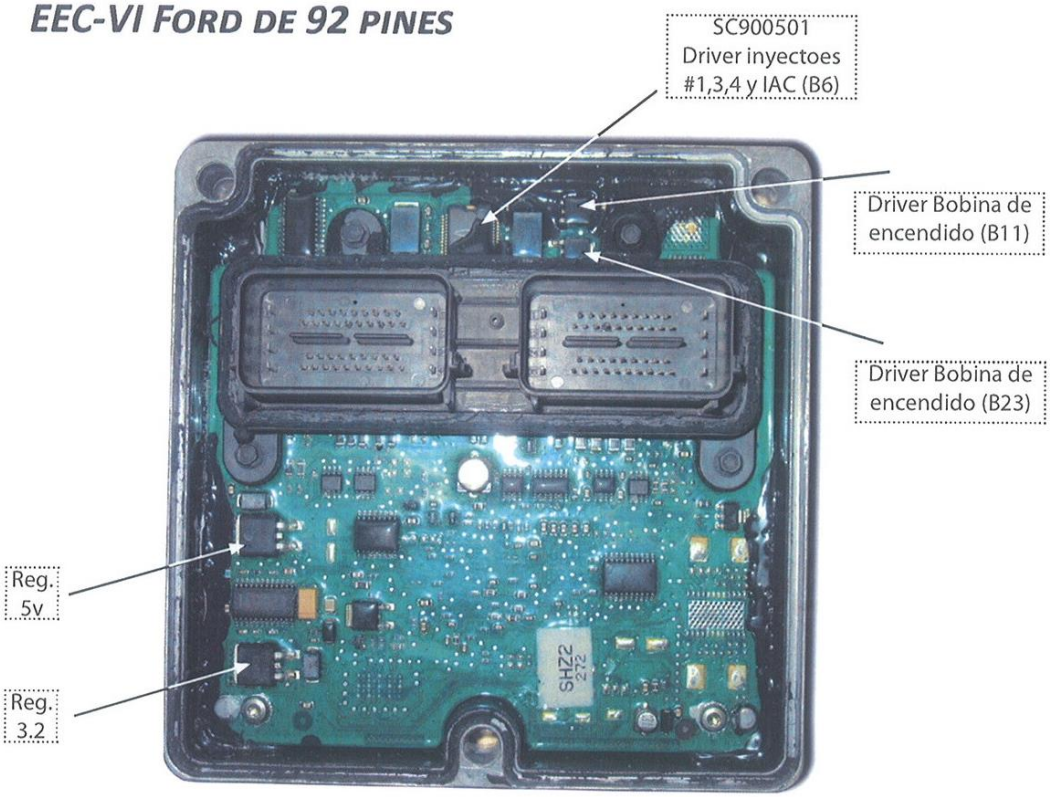


## PINES DE LA EEC-VI

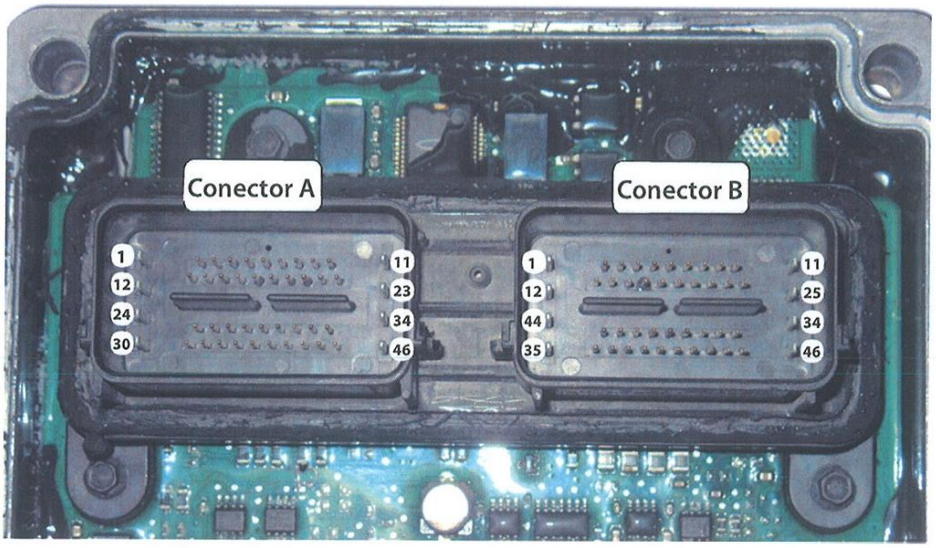

## TARJETA PRINCIPAL DE LA PCM150R

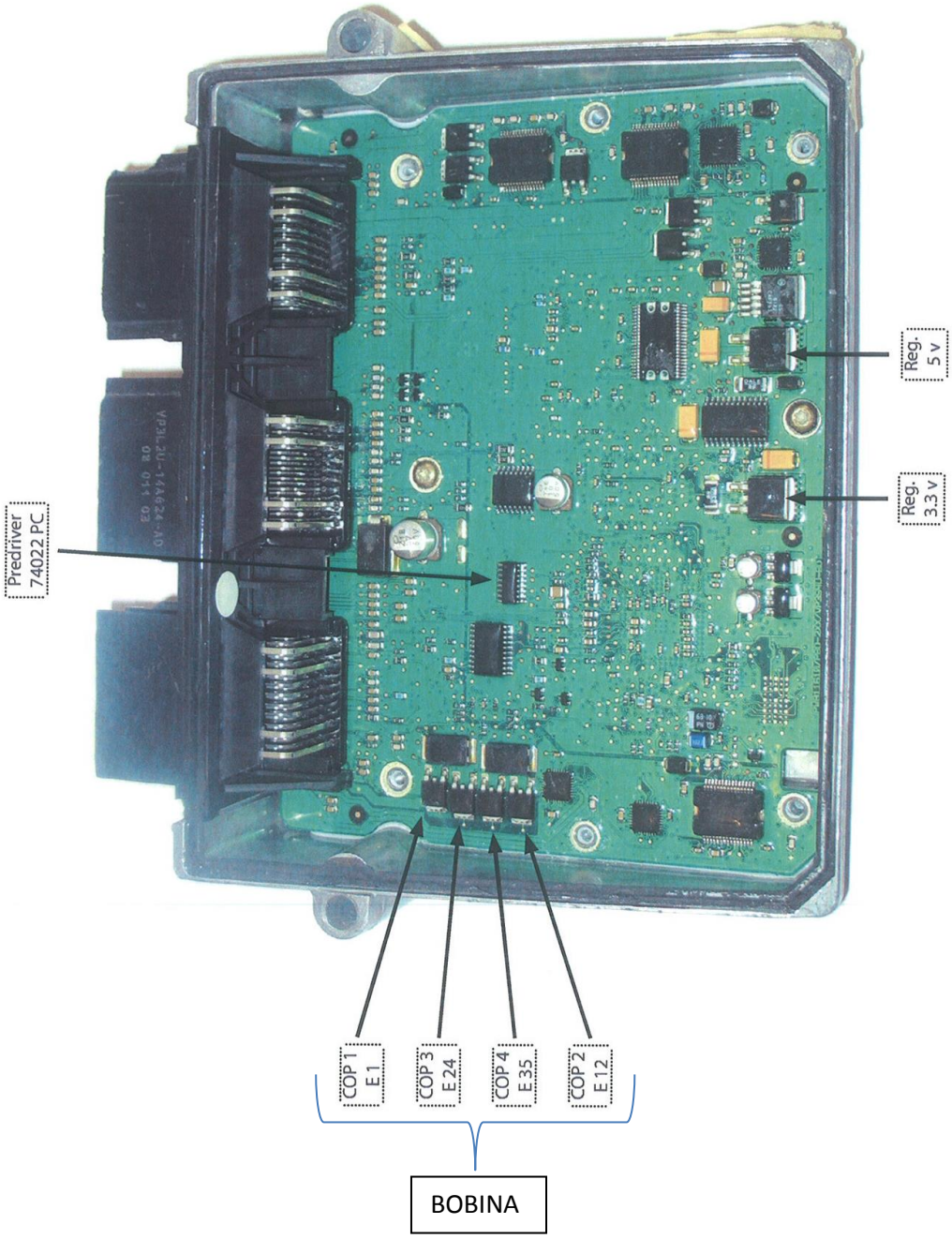

## PCM FORD DE 122 PINES

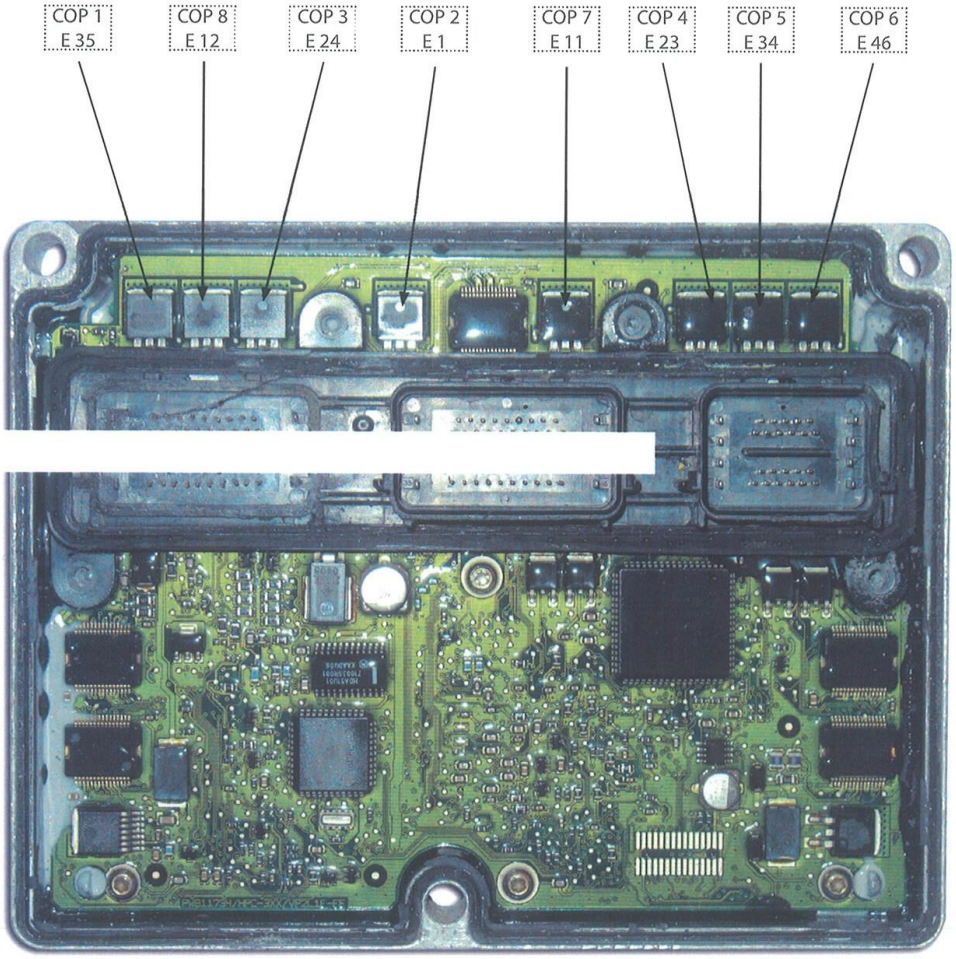

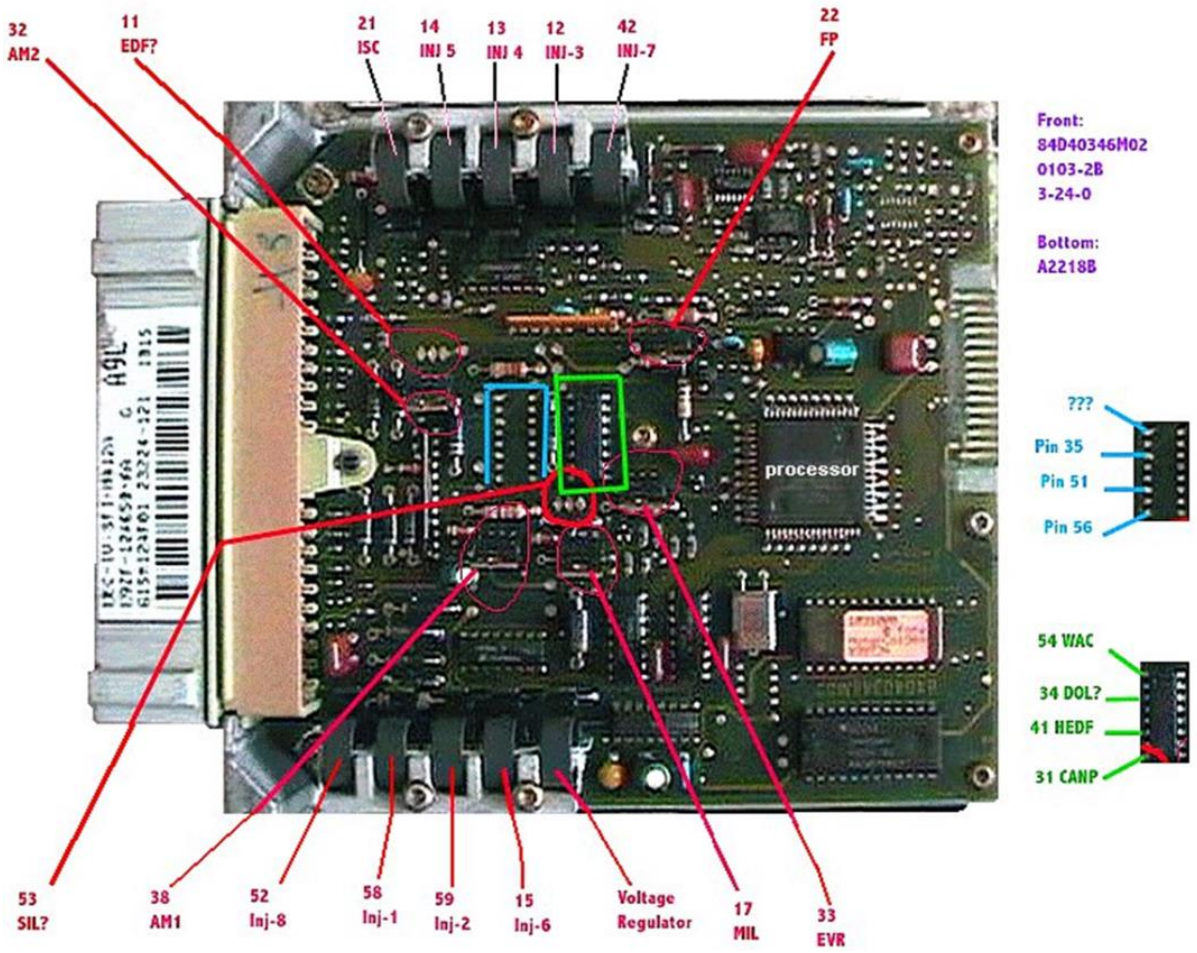
32
AM2
11
EDF?
21
ISC
14
INJ 5
13
INJ 4
12
INJ-3
42
INJ-7
22
FP
Front:
84D40346M02
0103-2B
3-24-0
Bottom:
A2218B
processor
???
Pin 35
Pin 51
Pin 56
54 WAC
34 DOL?
41 HEDF
31 CANP
53
SIL?
38
AM1
52
Inj-8
58
Inj-1
59
Inj-2
15
Inj-6
Voltage
Regulator
17
MIL
33
EVR