GROUP 11A

ENGINE MECHANICAL

CONTENTS

GENERAL DESCRIPTION. 11A-2
BASE ENGINE 11A-3

GENERAL DESCRIPTION

M2112000101162

This model is equipped with a newly developed 4B11 engine. It is a 4-cylinder, double overhead camshaft (DOHC) engine with a 2.0-L cylinder displacement. This engine has adopted the following features:

- MIVEC (MITSUBISHI INNOVATIVE VALVE TIMING ELECTRONIC CONTROL SYSTEM) for both the intake and exhaust valves
- Cylinder block made of an aluminum alloy
- Valve train with direct-acting valve tappets
- Silent timing chain

MAIN SPECIFICATIONS

Descriptions			Specifications
Engine type			4B11
Bore × stroke mm (in)			86 (3.4) × 86 (3.4)
Total displacement cm^3 (cu in)			1,998 (121.9)
Combustion chamber			Pent-roof type
Number of cylinders			4
Valve mechanism		Type	DOHC
		Intake valve	8
		Exhaust valve	8
Compression ratio			10.0
Valve timing	Intake valve	Opens (BTDC)	3° –28° <California> 0° –25° <except California>
		Closes (ABDC)	45° –20° <California> 48° –23° <except California>
	Exhaust valve	Opens (BBDC)	41° –21° <California> 44° –24° <except California>
		Closes (ATDC)	3° –23° <California> 0° –20° <except California>
Maximum output kW/r/min (HP/r/min)			107/6,000 (143/6,000) <California> 113/6,000 (152/6,000) <except California>
Maximum torque N· m/r/min (lbs-ft/r/min)			194/4,250 (143/4,250) <California> 198/4,250 (146/4,250) <except California>
Fuel injection system type			Electronic control MPI
Ignition system type			Electronic spark-advance control type (4-coil type)
Generator type			Alternating current system (with built-in IC regulator)
Starter motor type			Reduction drive type

BASE ENGINE

M2112001001050

CYLINDER HEAD

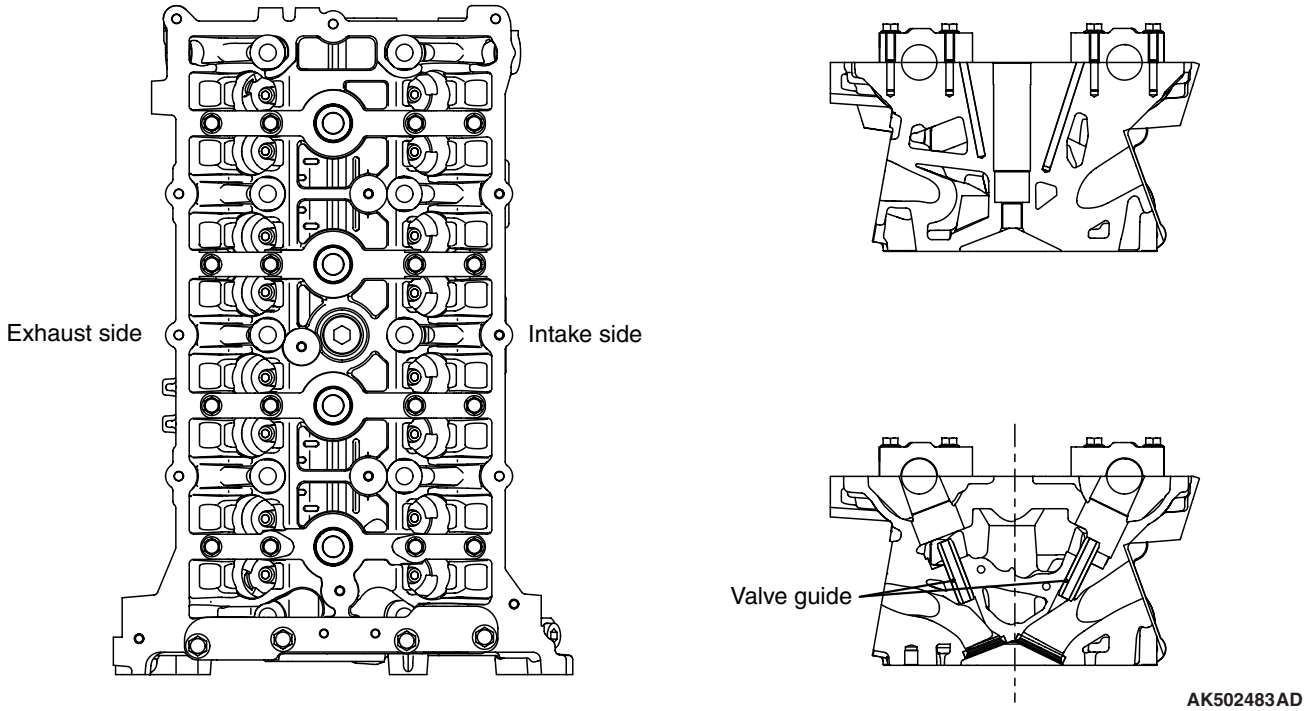

A cylinder head made of an aluminum alloy, which is lightweight and offers a high level of cooling efficiency, has been adopted. A pentroof combustion chamber with a center spark plug has been adopted. It has a small valve compound angle to realize a compact chamber.

Cross-flow type intake and exhaust ports have been adopted. Two intake ports and two exhaust ports are provided independently on the right and left sides. Five camshaft bearings are provided at the intake and exhaust sides, respectively. The No. 4 bearing sustains the thrust load of the camshaft. Only the No. 1 bearing uses a bearing cap that integrates both the intake and exhaust sides.

VALVE SEATS

Sintered alloy valve seats have been adopted.

The oversized (0.3 mm) service parts are available.

VALVE GUIDES

Valve guides that are common to both the intake and exhaust have been adopted.

The oversized (0.25 mm) service parts are available.

CYLINDER HEAD GASKET

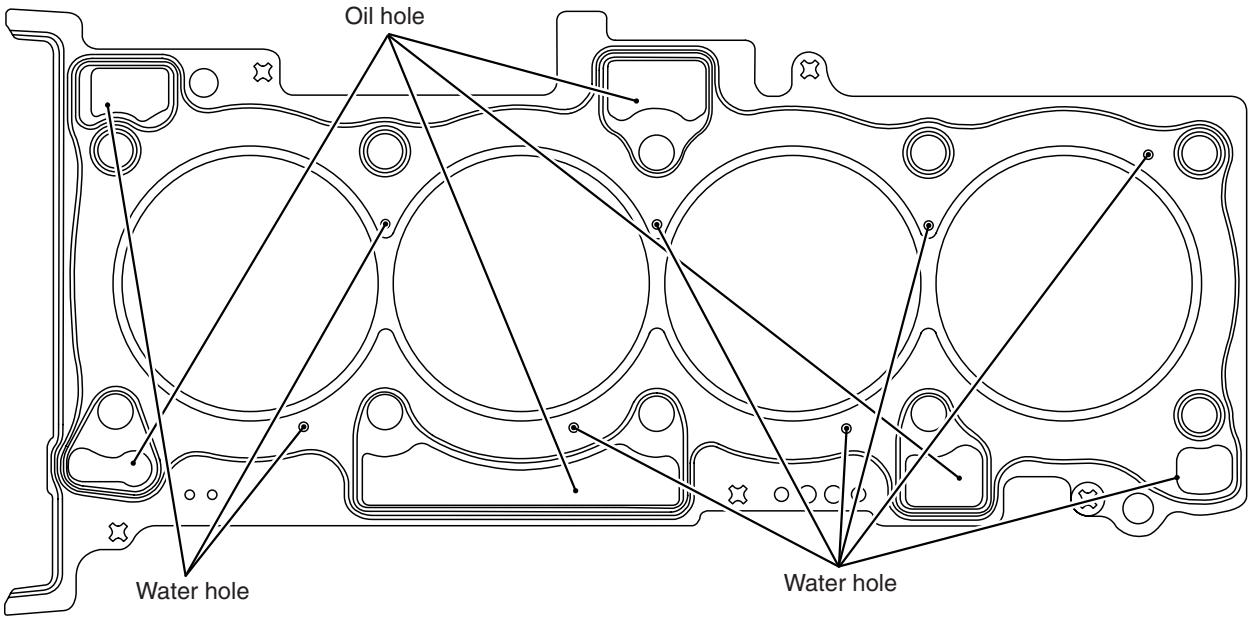

AK604543AB

A dual-layer, metal type cylinder head gasket that excels in heat resistance and sealing performance has been adopted.

CYLINDER HEAD COVER

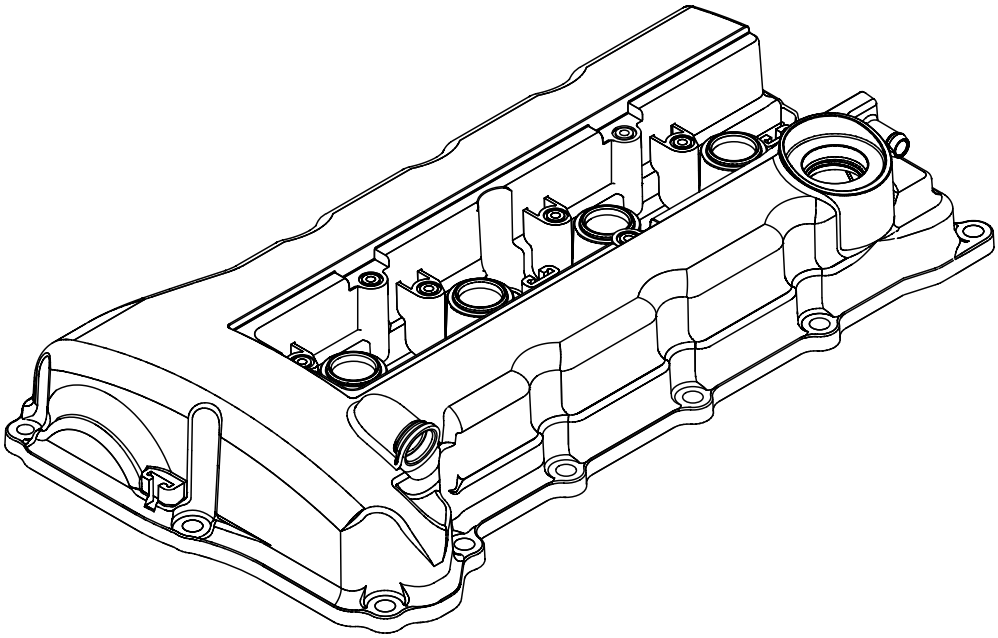

AK502485

A Plastic cylinder head cover has been adopted.

CYLINDER BLOCK

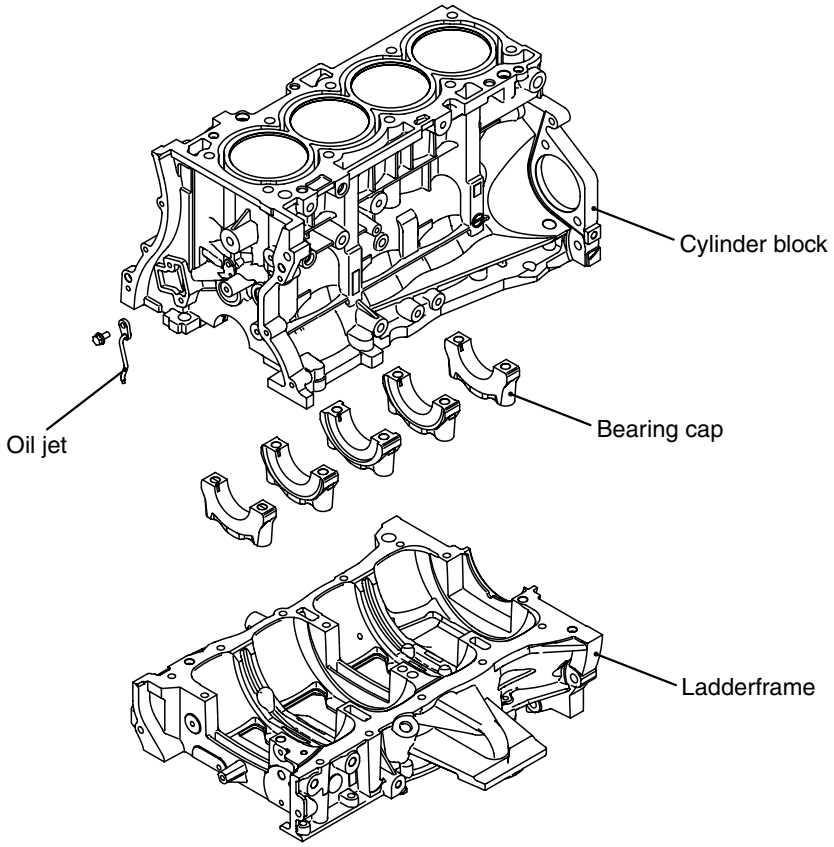

AK502486AE

A cylinder block made of an aluminum alloy has been adopted for weight reduction.
5 bearings are used for the crankshaft journals and the No. 3 bearing sustains the thrust load of the crankshaft.
The water jacket is the full Siamese type.
An oil jet is used in front of the cylinder block to supply engine oil to the timing chain.

ITEM	SPECIFICATIONS
Distance between top and crankshaft center mm (in)	230.1 (9.06)
Bore mm (in)	86 (3.4)
Bore pitch mm (in)	96 (3.8)
Stroke mm (in)	86 (3.4)

PISTONS

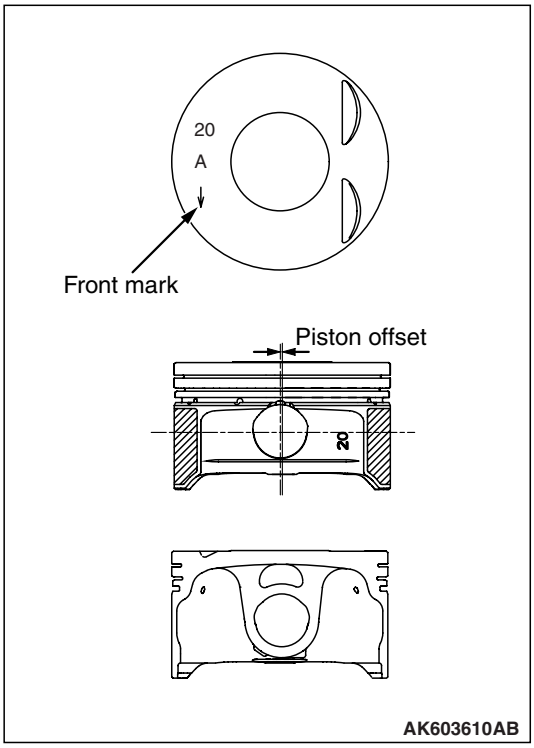

The pistons are made of a special aluminum alloy. Their weight has been reduced by lowering their overall height and increasing the depression at each end of the piston pin.
The piston pin hole center is offset 0.8 mm (0.031 in) towards the thrust side of the piston center.
The skirt portion along the perimeter of the piston is finished with streaks that excel in oil retention and seizure resistance.

ITEM	SPECIFICATIONS
Basic diameter mm (in)	86 (3.4)
Pin hole diameter mm (in)	21 (0.8)
Overall height mm (in)	50.5 (1.99)

PISTON PINS

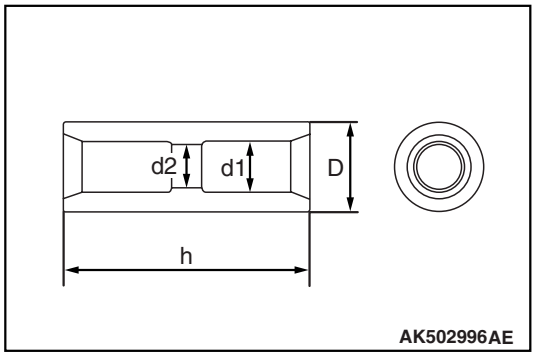

The piston pins are the semi-floating type. Each pin is press-fit and secured in the small end of the connecting rod, while it floats in the piston.

ITEM	SPECIFICATIONS
Outer diameter (D) mm (in)	21 (0.8)
Inner diameter (d1) mm (in)	12 (0.5)
Inner diameter (d2) mm (in)	10.5 (0.41)
Overall length (h) mm (in)	58 (2.3)

PISTON RINGS

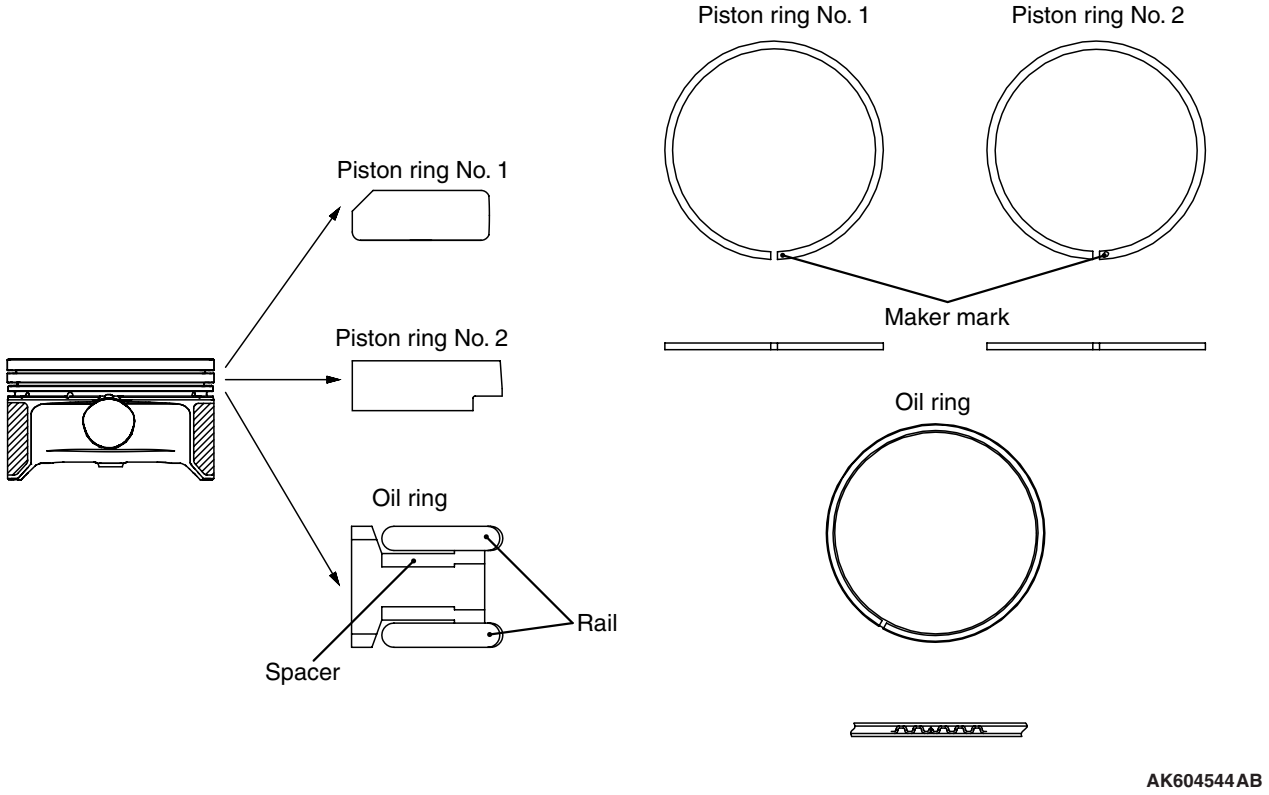

The piston rings consist of No. 1 and No. 2 rings and an oil ring.

Item	Piston ring No. 1	Piston ring No. 2	Oil ring
Shape	Inside bevel, Barrel	Taper undercut	3-piece, Barrel
Surface treatment (cylinder contact surface)	Chrome plating	Parkerizing	Hard plated Parkerizing
Supplier mark	1T	2T	None

CONNECTING RODS

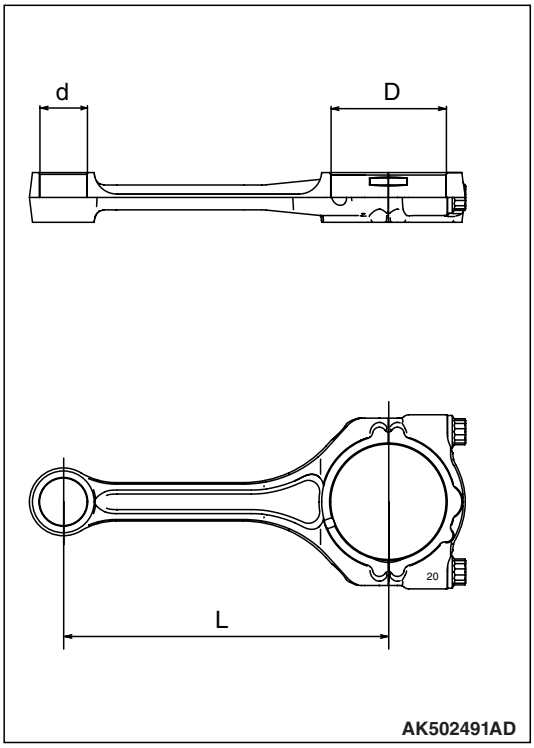

The connecting rods are made of highly rigid, forged carbon steel. The cross section of the rod portion is shaped like the letter H.
A fracture-split process has been adopted for splitting the big end of the connecting rod.
The fracture split connecting rod has the high insertion force between the rod and the cap as well as the high installation location accuracy.
The oil holes that feed oil from the main journals of the crankshaft to the crankshaft pins lubricate the bearings at the big ends of the connecting rods.

Item	Specifications
Small end hole diameter (d) mm (in)	21 (0.87)
Big end hole diameter (D) mm (in)	51 (2.01)
Center-to-center distance (L) mm (in)	149.25 (5.876)

CONNECTING ROD BEARINGS

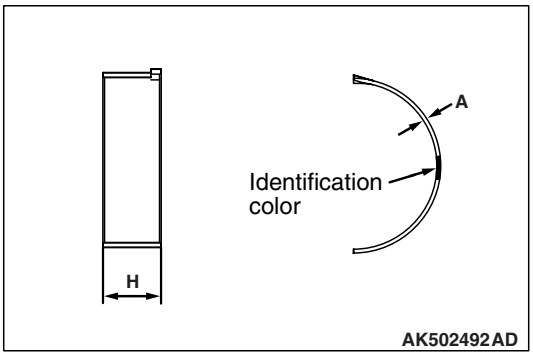

The upper and lower connecting rod bearings are the same. Each connecting rod bearing is provided with a backing plate. Its bearing portion is made of an aluminum alloy and its backing plate is made of ordinary sheet steel.
The width of the connecting rod bearing has been made as narrow as possible in proportion to the bearing cap in order to reduce friction loss.

Item	Specifications
Width (H) mm (in)	17 (0.7)
Thickness (A) mm (in)	1.5 (0.06)

CRANKSHAFT

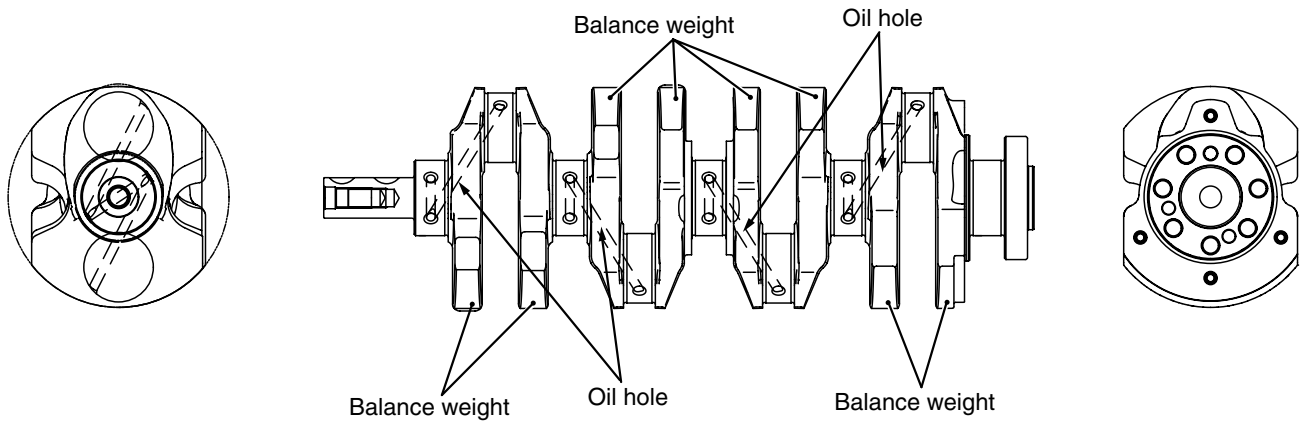

AK502493AD

A forged crankshaft has been adopted.
It has 5 main bearings and 8 balance weights.
The crankshaft pins are located at equal 180° intervals.
The oil holes feed engine oil from the journals to the pins.
A crankshaft sprocket and an oil pump drive shaft are press-fit to the front of the crankshaft.

Item	Specifications
Pin outer diameter mm (in)	48 (1.9)
Journal outer diameter mm (in)	52 (2.0)

CRANKSHAFT BEARINGS, THRUST BEARINGS

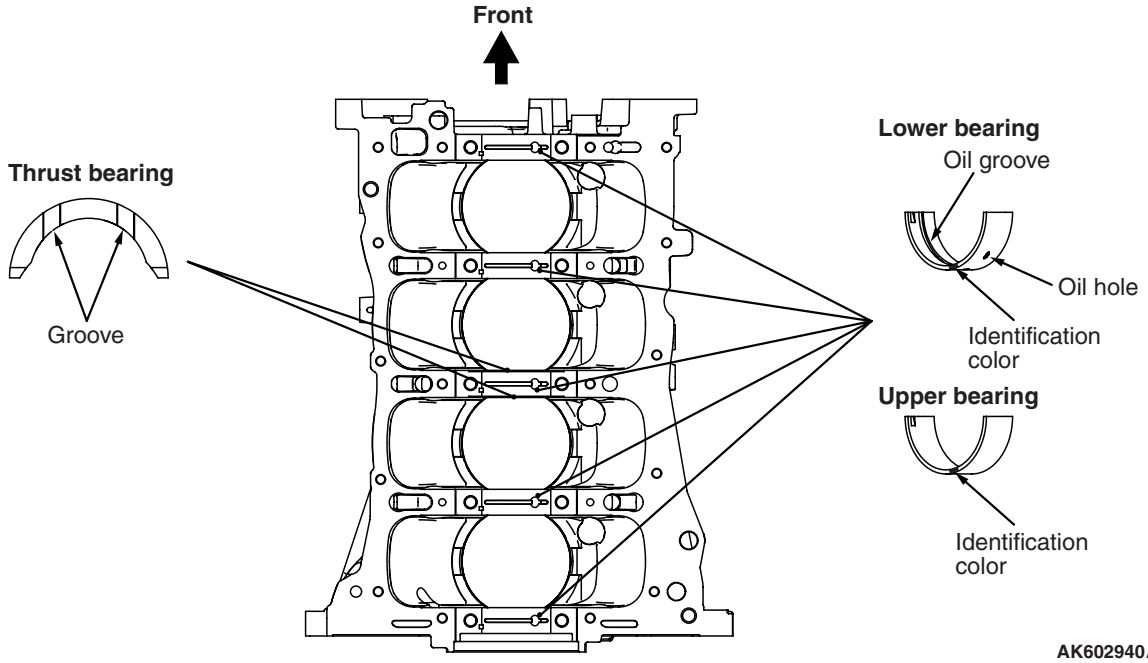

AK602940AC

The upper crankshaft bearings have oil grooves and the lower crankshaft bearings do not.
Each crankshaft bearing is provided with a backing plate. Its bearing portion is made of an aluminum alloy and its backing plate is made of ordinary sheet steel. A thrust bearing, which sustains the load in the thrust direction, is provided at each end of the No. 3 bearing.

Item		Specifications
Crankshaft bearing	Width mm (in)	18 (0.71)
	Thickness mm (in)	2.0 (0.08)
Crankshaft thrust bearing	Thickness mm (in)	2.0 (0.08)

CRANKSHAFT PULLEY

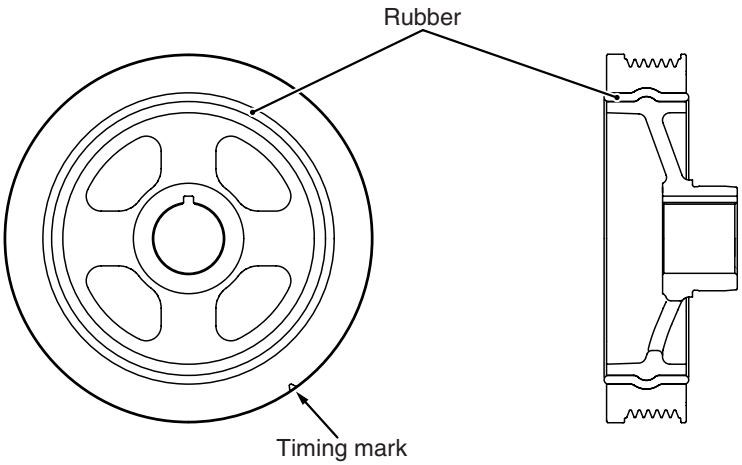

AK604551 AB

The pulley is made of cast iron.
The pulley portion has grooves for the V-ribbed belt (with 6 crests).
The flange portion of the pulley has a timing mark notch for checking the ignition timing.

A torsion damper has been adopted to reduce the torsional vibration of the crankshaft, as well as to dramatically reduce noise and vibration in the high-speed range.

DRIVE PLATE

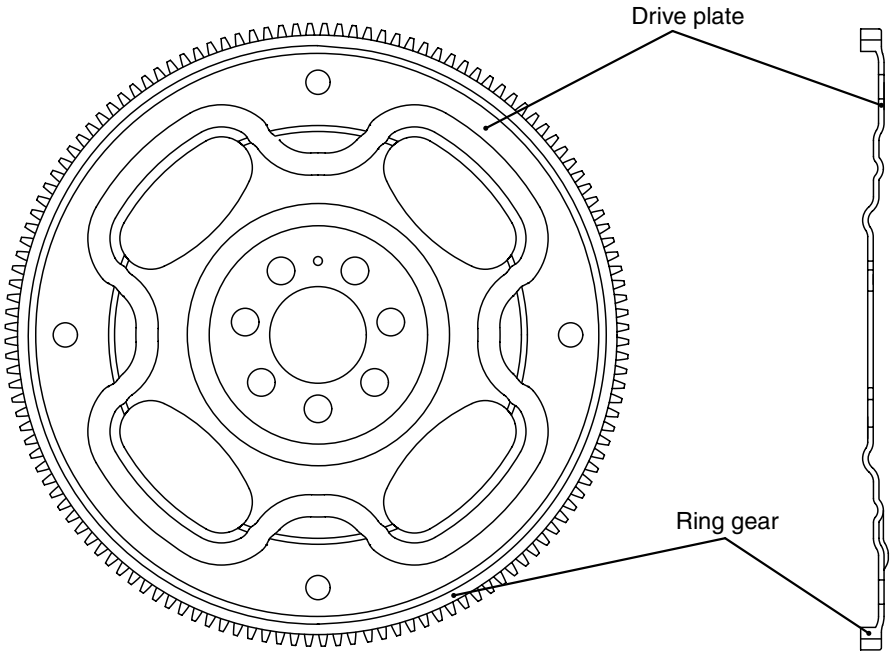

AK502496AD

The drive plate is made of sheet metal.

The drive plate is mounted with 7 bolts.

FLYWHEEL

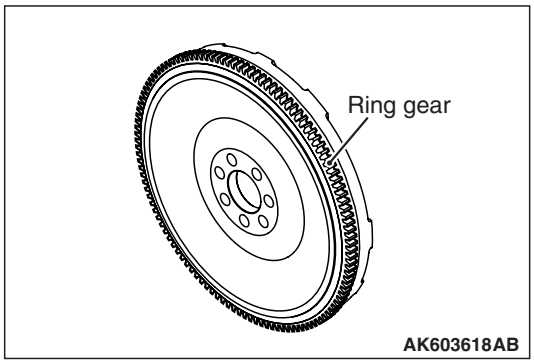

A cast iron ring gear is a shrink fit in the iron casting of the flywheel.
The flywheel is mounted with 7 bolts.

TIMING CHAIN TRAIN

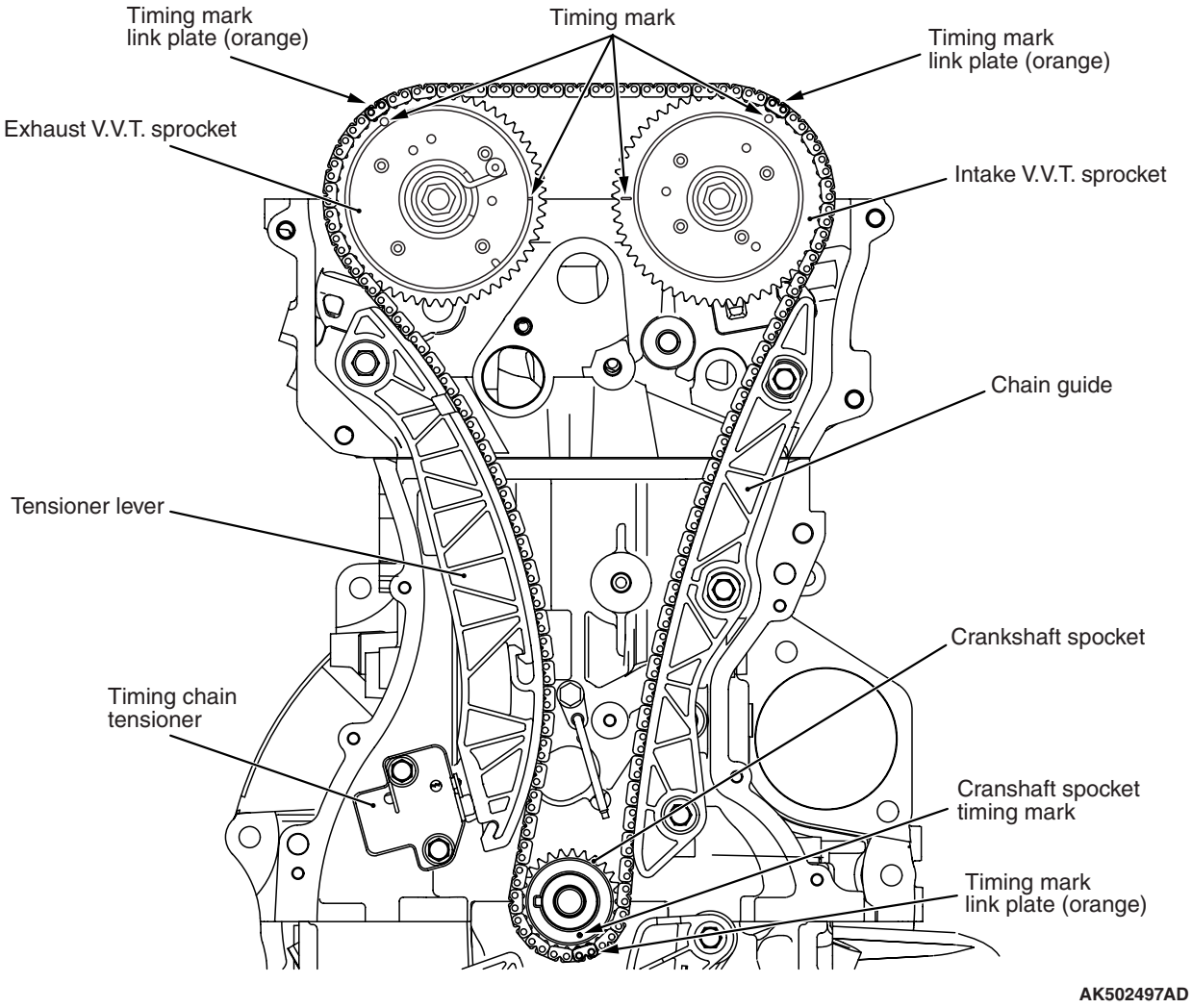

The two camshafts are driven by the timing chain via the camshaft sprockets.
The timing chain is a silent, endless type, consisting of 180 links. It is installed around the V.V.T. sprockets and the crankshaft sprocket.

Three (orange) mark link plates are installed on the timing chain to locate the sprockets.

Item	Number of teeth
V.V.T. sprockets	54
Crankshaft sprocket	27

TIMING CHAIN TENSIONER

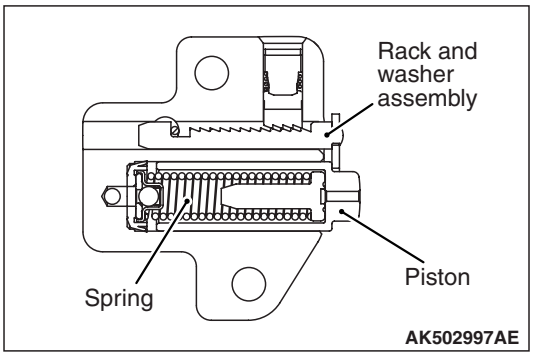

The tensioner maintains the tension of the timing chain. It contains a piston with a built-in spring. With the tensioner installed, its piston directly pushes on the tension lever in order to automatically adjust the tension of the timing chain.

VALVE TRAIN

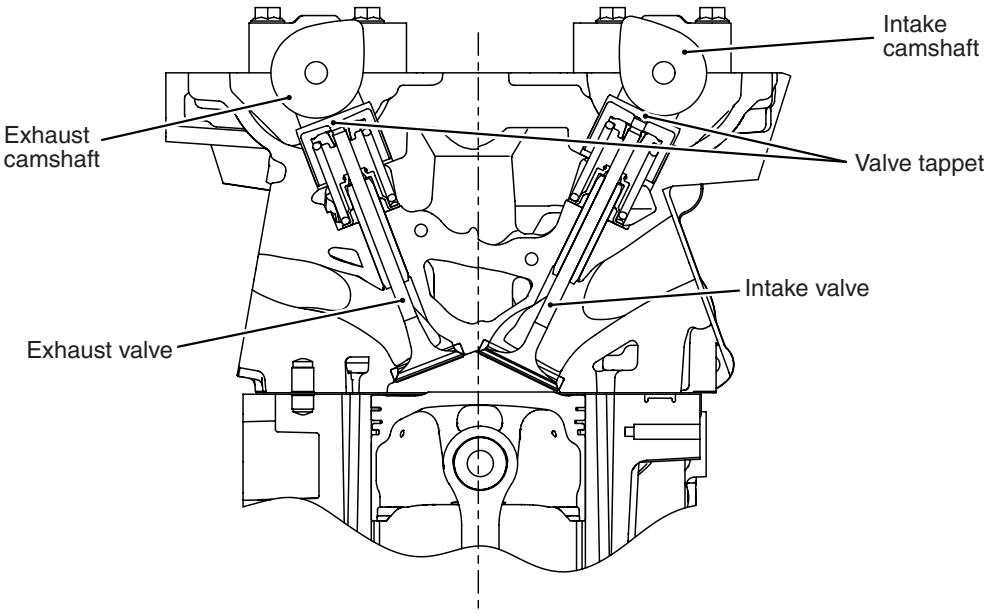

The valve train is the 4-valve, double overhead camshaft (DOHC) type in which the camshafts are located above the valves.
Two intake and exhaust valves for each cylinder are arranged in a V shape.

A valve tappet is interposed between the camshaft and each valve, which allows the valve to open and close.

VALVES

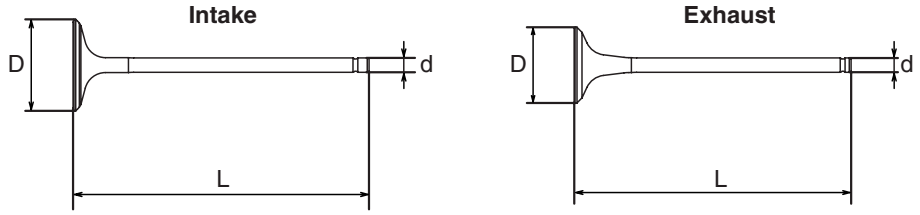

AK502500AD

The valves are made of heat-resistant steel and are nitrided on their entire surface.

Item	Intake valve	Exhaust valve
Head diameter (D) mm (in)	35 (1.4)	29 (1.1)
Stem diameter (d) mm (in)	5.5 (0.22)	5.5 (0.22)
Overall length (L) mm (in)	113.180 (4.4559)	105.887 (4.1688)

VALVE STEM SEALS

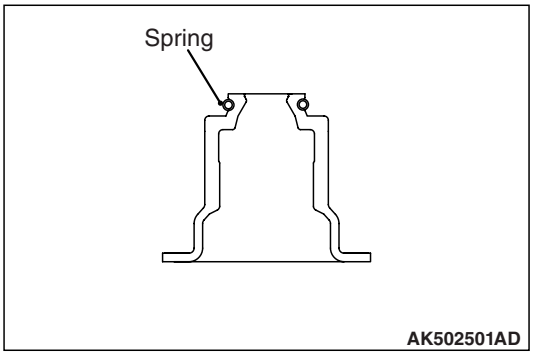

AK502501AD

The valve stem seals are integrated with the valve spring seats.
The valve stem seal portion excels in sealing performance and is equipped with a spring to prevent oil from descending.

VALVE SPRINGS

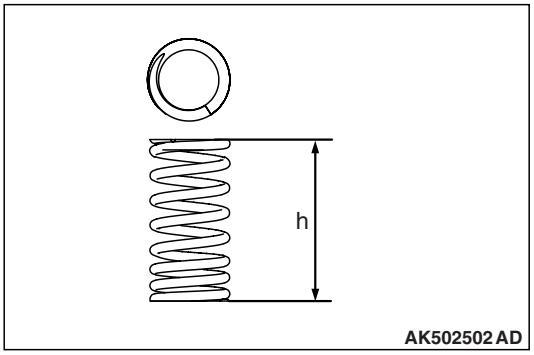

AK502502AD

To prevent the engine from surging at high speeds, unequal-pitch springs are used.

Item	Specifications
Free height (h) mm (in)	47.44 (1.867)
Total number of windings	8.67

VALVE TAPPETS

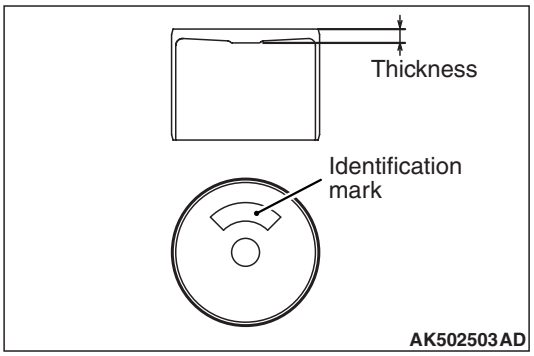

To adjust the valve lift, 47 sizes of valve tappets are available in 0.015 mm (0.0006 in) increments, from 3.000 mm (0.1181 inch) to 3.690 mm (0.1453 in).

MIVEC (MITSUBISHI INNOVATIVE VALVE TIMING ELECTRONIC CONTROL SYSTEM)

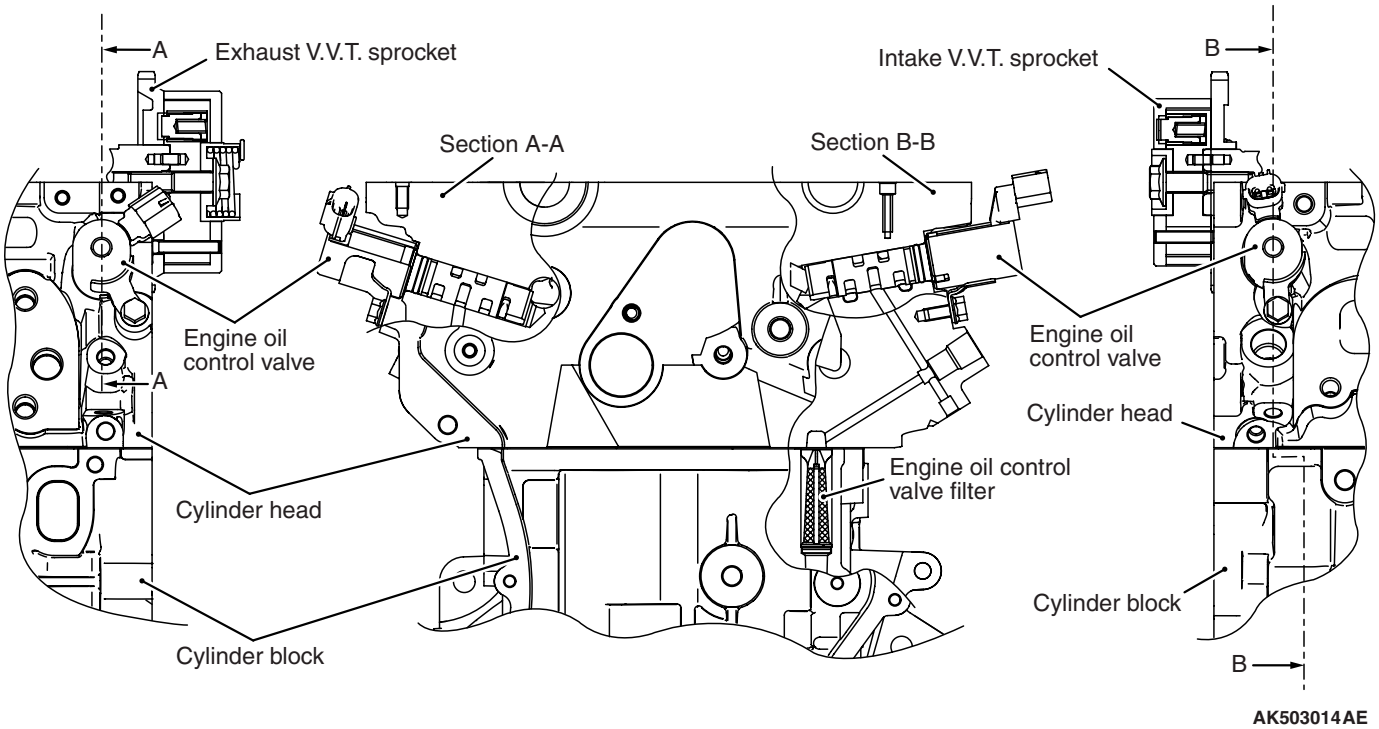

The MIVEC consists of the parts shown in the illustration.

This system continuously varies and optimally controls the opening and closing timing of the individual intake and exhaust valves, in order to improve torque and power output in all speed ranges.

V.V.T. SPROCKET (VARIABLE VALVE TIMING SPROCKET)

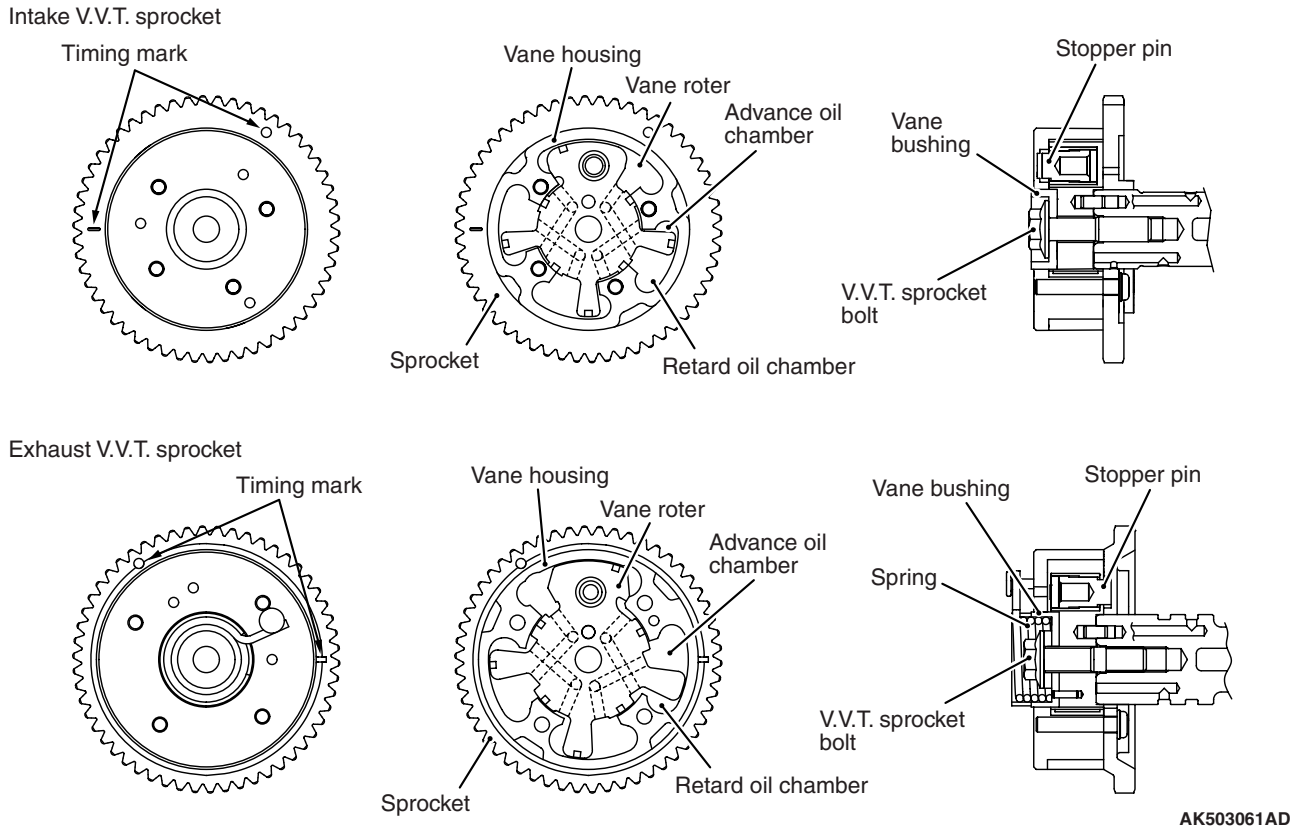

The engine oil control valve controls the hydraulic pressure in order to move the vane rotor in the V.V.T. sprocket to optimally control valve timing.

CAMSHAFT

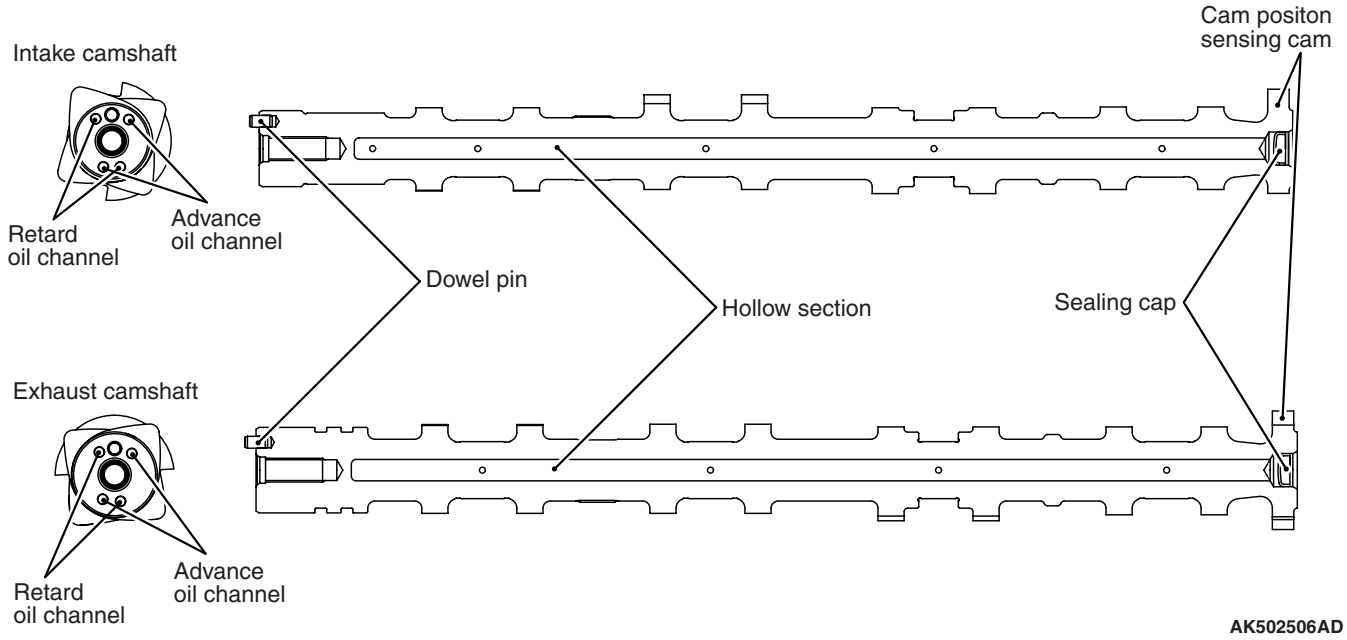

The camshaft are hollow for weight reduction. Each camshaft is provided with an oil passage to guide the hydraulic pressure from the engine oil control valve to the V.V.T. sprocket.

A cam position sensing cam for detecting the cam position (used by the cam position sensor) is integrated at the back of each camshaft.

Item			Specifications
Overall length mm (in)	Intake		435.00 (17.126)
	Exhaust		438.27 (17.255)
Journal outer diameter mm (in)	Intake	No.1	30 (1.2)
		No.2 –5	24 (0.9)
	Exhaust	No.1	36 (1.4)
		No.2 –5	24 (0.9)
Camshaft lift mm (in)	Intake		8.45 (0.333)
	Exhaust		8.20 (0.323)

ENGINE OIL CONTROL VALVE

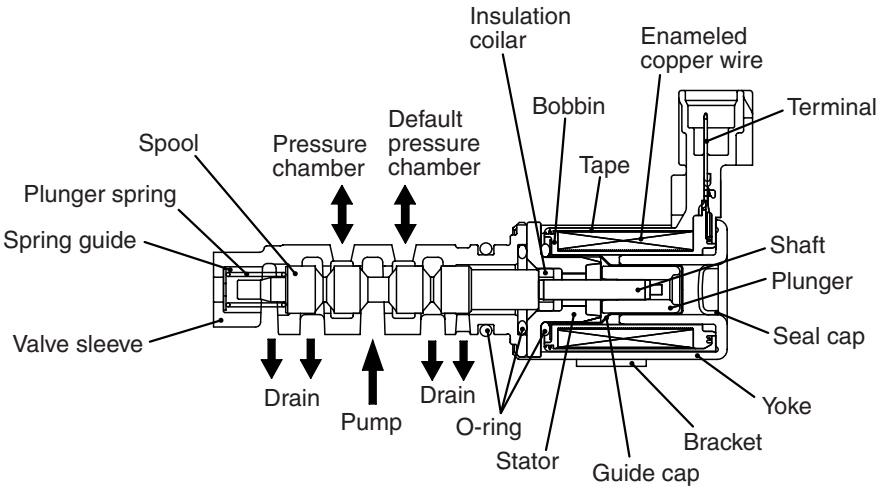

AK302997AE

The engine oil control valve consists of a solenoid valve, which switches the hydraulic pressure that acts on the vane rotor in the V.V.T. sprocket assembly. This valve is actuated by a signal from the engine ECU.

TIMING CHAIN CASE

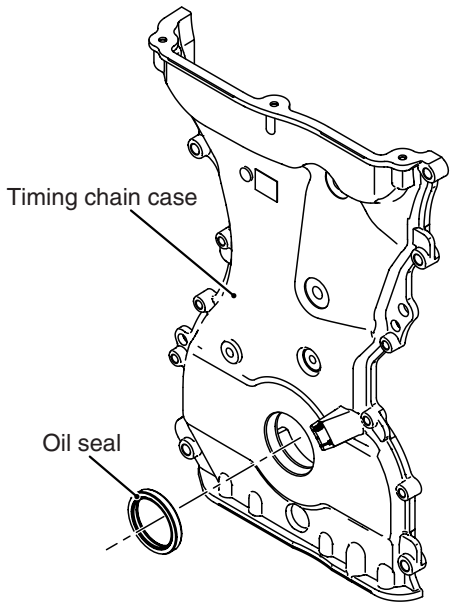

AK502507AD

The timing chain case is made of an aluminum alloy.
A front crankshaft oil seal is press-fit into the case.

NOTES

GROUP 17

ENGINE AND EMISSION CONTROL

CONTENTS

ENGINE CONTROL 17-2
GENERAL INFORMATION. 17-2

AUTO-CRUISE CONTROL SYSTEM 17-2
GENERAL INFORMATION. 17-2
CONSTRUCTION AND OPERATION 17-5

EMISSION CONTROL 17-8
GENERAL DESCRIPTION 17-8
CRANKCASE VENTILATION SYSTEM . . . 17-10
EVAPORATIVE EMISSION CONTROL SYSTEM 17-11
EXHAUST GAS RECIRCULATION (EGR) SYSTEM <California> 17-12
EMISSION REDUCTION SYSTEMS. 17-14

ENGINE CONTROL

GENERAL INFORMATION

M2170001000659

For the accelerator system, an electronic throttle valve control system has been adopted, disposing of an accelerator cable. This system detects the accelerator pedal travel by using a accelerator pedal position sensor (APP sensor) in the accelerator pedal assembly for electronic control of the throttle valve angle.

CONSTRUCTION DIAGRAM

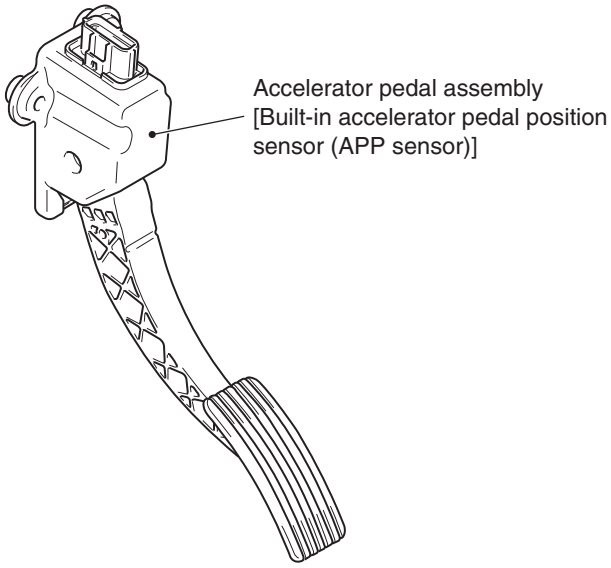

AC505671AB

AUTO-CRUISE CONTROL SYSTEM

GENERAL INFORMATION

M2170001000682

By using the auto-cruise control system, the driver can drive at preferred speeds in a range of approximately 40 to 200 km/h (25 to 125 mph) without depressing the accelerator pedal.

For this auto-cruise control system, in conjunction with the electronic throttle valve control system, the engine control module (ECM) electronically controls the throttle valve.

CONSTRUCTION DIAGRAM

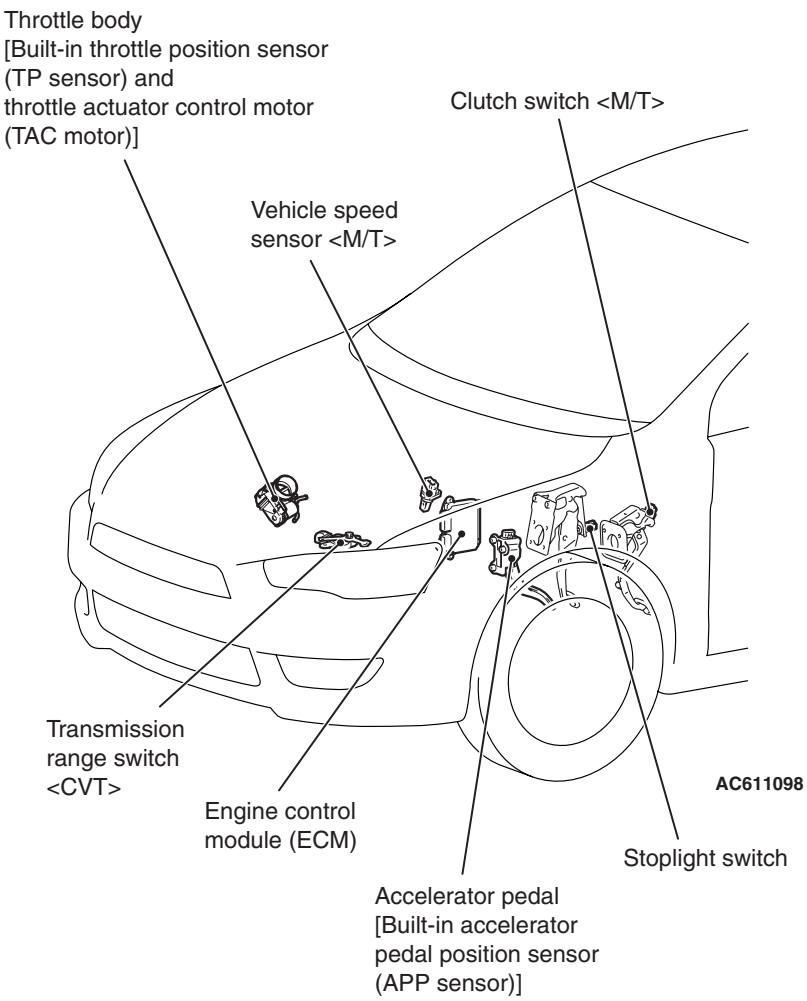
Throttle body
[Built-in throttle position sensor
(TP sensor) and
throttle actuator control motor
(TAC motor)]
Clutch switch <M/T>
Vehicle speed
sensor <M/T>
Transmission
range switch
<CVT>
Engine control
module (ECM)
Accelerator pedal
[Built-in accelerator
pedal position sensor
(APP sensor)]
Stoplight switch
AC611098

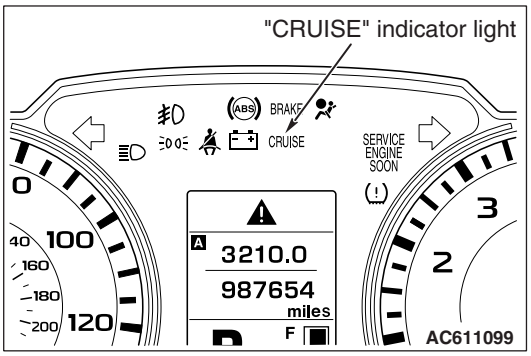
"CRUISE" indicator light
BRAKE
CRUISE
SERVICE
ENGINE
SOON
3210.0
987654
miles
AC611099

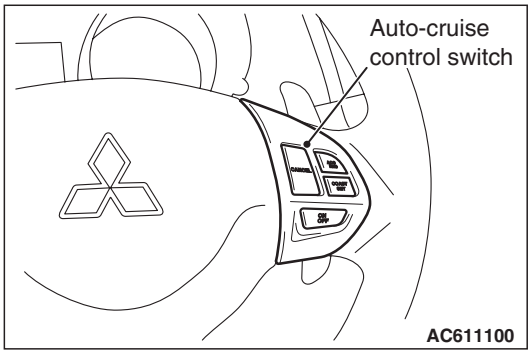
Auto-cruise
control switch
AC611100

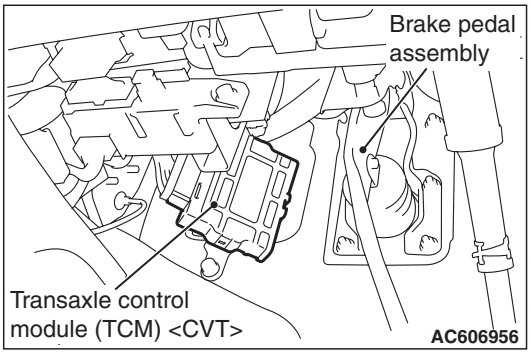
Brake pedal
assembly
Transaxle control
module (TCM) <CVT>
AC606956

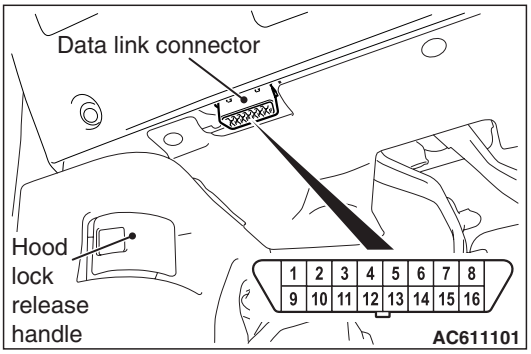
Data link connector
Hood
lock
release
handle
1 2 3 4 5 6 7 8
9 10 11 12 13 14 15 16
AC611101

AC611102AD

COMPONENTS AND FUNCTIONS

Component		Function
Accelerator pedal position sensor (APP sensor)		Informs the ECM of the accelerator pedal depression.
Auto-cruise control switch	"ON/OFF" switch	Power switch for auto-cruise control system.
	"ACC/RES" switch	Vehicle speed is set with the "ACC/RES" switch and "COAST/SET" switch.
	"COAST/SET" switch	
	"CANCEL" switch	Cancels the cruise speed setting.
Cancel system	Clutch switch <M/T>	Because the constant speed driving is cancelled by the clutch operation, the clutch pedal status is detected.
	Stoplight switch	• Because the constant speed driving is canceled by the brake operation, it detects the brake pedal status. • As for the stoplight switch, two built-in switches, the stoplight switch which is also used for the stoplight illumination and the brake switch which is used exclusively for the auto-cruise control, are integrated, and thus the reliability is enhanced.
	Transmission range switch <CVT>	Because the constant speed driving is cancelled by the selector lever operation, it detects the "N" position.
"CRUISE" indicator light		The light is included in the combination meter and illuminates when the "ON/OFF" switch is pressed (auto-cruise control system: ON).
Data link connector		If the M.U.T.-III scan tool is connected, the input check code from the ECM can be read.
Engine control module (ECM)		• Based on the input signal from each sensor and switch, it outputs the throttle opening instruction signal to the TAC motor. • Based on the input signal from each sensor and switch, it outputs the transaxle control signal to the TCM <CVT>. • Based on the vehicle speed signal from the vehicle speed sensor, it calculates the vehicle speed <M/T>. • Based on the secondary pulley speed sensor signal from the TCM, it calculates the vehicle speed <CVT>. • Based on the selector lever "N" position signal of the transmission range switch from the ECM, it cancels constant speed driving. <CVT>. • Outputs the ON/OFF signals of "CRUISE" indicator light and auto-cruise control system. • The diagnostic trouble code signal is sent to the "CRUISE" indicator light. • The input check code is sent to the data link connector.
Throttle actuator control motor (TAC motor)		The throttle valve opens and closes in response to the throttle angle signal from the ECM.

Component	Function
Throttle position sensor (TP sensor)	Informs the ECM of the throttle valve opening angle.
Transaxle control module (TCM) <CVT>	• Based on the transaxle control signal from the ECM, it controls the transaxle. • Outputs the signal from the secondary pulley speed sensor to the ECM. • Transmits the selector lever "N" position signal from the transmission range switch to the ECM.
Vehicle speed sensor <M/T>	Transmits the vehicle speed signal proportional to the vehicle speed to the ECM.

CONSTRUCTION AND OPERATION

M2170002000232

SYSTEM OUTLINE

The ECM calculates the auto-cruise control system operation status when the ECM receives input signals from the auto-cruise control switch, vehicle speed and cancel system [stoplight switch and clutch switch <M/T> or transmission range switch <CVT>].

The engine control section sends the target accelerator pedal opening angle value for auto-cruise control system, the TCM issues a command to transaxle control <CVT>, and the gauge issues an ON/OFF command for the "CRUISE" indicator light.
In the engine control section, the target throttle valve opening angle value is calculated from the target accelerator pedal opening angle value for auto-cruise control system and the actual accelerator angle value.The vehicle speed is then controlled by applying the TAC motor.

BLOCK DIAGRAM

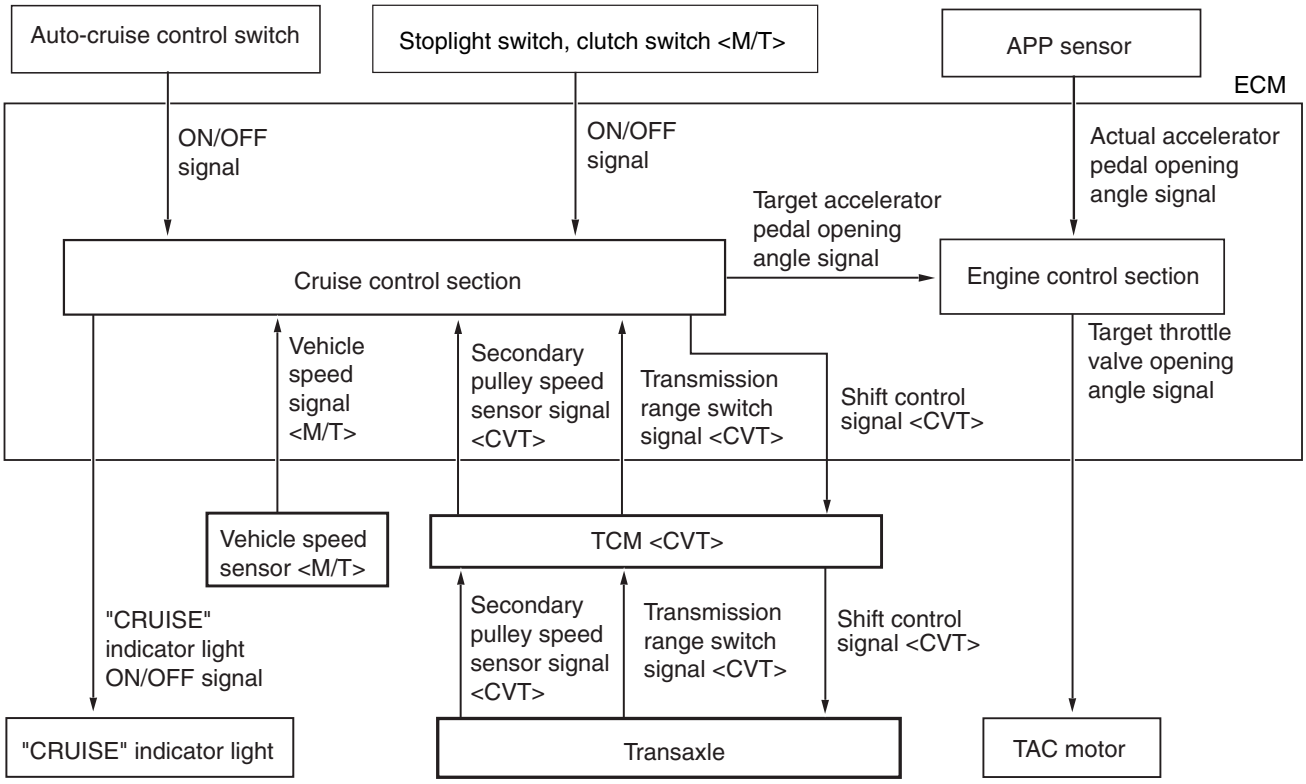

SYSTEM FUNCTIONS

SET FUNCTION

1. During driving with the vehicle speed range from approximately 40 to 200 km/h (25 to 125 mph), press and release the "COAST/SET" switch.
2. The vehicle speed when the "COAST/SET" switch is released is memorized. Thereafter, the constant speed driving is performed at that vehicle speed.
3. When the "COAST/SET" switch is operated during the driving with the vehicle speed of approximately 200 km/h (125 mph) or more, the constant speed driving will not be performed.

COAST FUNCTION

1. When the "COAST/SET" switch is continuously pressed for 0.5 seconds or longer during constant speed driving, the throttle valve becomes fully closed while the switch is pressed, and the vehicle is decelerated.
2. When the "COAST/SET" switch is released, the vehicle speed at that time is now memorized. Thereafter, the constant speed driving is performed at that vehicle speed.
3. Also when the "COAST/SET" switch is pressed for less than 0.5 second, the vehicle is decelerated 1.6 km/h (1 mph) from the vehicle speed of constant speed driving, and the decelerated vehicle speed is now memorized. Thereafter, the constant speed driving is performed at that vehicle speed.
4. When the "COAST/SET" switch is continuously pressed and the vehicle speed is decelerated to approximately 40 km/h (25 mph) or less, the set function and coast function are cancelled, and the constant speed driving is cancelled.

RESUME FUNCTION

1. When the "CANCEL" switch is pressed or the brake pedal is depressed during the constant speed driving, it cancels the constant speed driving.
2. Subsequently, when the "ACC/RES" switch is pressed during driving with the vehicle speed of approximately 40 km/h (25 mph) or more, the constant speed driving is performed with the vehicle speed memorized at the last cancellation of constant speed driving.

ACCEL FUNCTION

1. When the "ACC/RES" switch is continuously pressed for 0.5 second or more during constant driving, it accelerates the vehicle with specified acceleration while the switch is pressed.
2. Then, when the "ACC/RES" switch is released, the vehicle speed at that time is now memorized. Thereafter, the constant speed driving is performed at that vehicle speed.
3. Also, when the "ACC/RES" switch is pressed for less than 0.5 second, the vehicle is accelerated 1.6 km/h (1 mph) from the vehicle speed of constant speed driving, and the accelerated vehicle speed is now memorized. Thereafter, the constant speed driving is performed at that vehicle speed.
4. It is possible to keep pressing the "ACC/RES" switch until the vehicle speed is accelerated to approximately 200 km/h (125 mph) or above. However, after the "ACC/RES" switch is released, the vehicle speed of approximately 200 km/h (125 mph) becomes the newly memorized vehicle speed. Thereafter, the constant speed driving is performed at that speed.

CANCEL FUNCTION

When any of the following conditions are satisfied, the constant speed driving will be cancelled.

- The auto-cruise control system is stopped by the pressing the "ON OFF" switch.
- The "CANCEL" switch is pressed.
- The brake pedal is depressed.
- The clutch pedal is depressed <M/T>.
- The selector lever is shifted to the "N" position <CVT>.
- The vehicle speed becomes approximately 40 km/h (25 mph) or less.
- The vehicle speed is reduced 15 km/h (9 mph) or more from the speed at which the constant speed driving was started.
- An abnormality occurs in the vehicle speed signal.
- The engine coolant temperature becomes abnormally high.
- An abnormality occurs to the ECM.
- An abnormality occurs to the TCM <CVT>.
- An abnormality occurs to the CAN communication.

FAIL-SAFE FUNCTION

When any of the following conditions are satisfied, the auto-cruise control system function is stopped until the system returns to normal. Also, when any of the conditions are satisfied during the constant speed driving, the constant speed driving is cancelled immediately.

- An abnormality occurs to the auto-cruise control switch.
- An abnormality occurs to the stoplight switch.

When any of the following conditions are satisfied, stop the vehicle once and turn the ignition switch to "LOCK" (OFF). Otherwise, even when the system returns to normal, the auto-cruise control system function will continue to be stopped. Also, when any of the conditions are satisfied during the constant speed driving, the constant speed driving is cancelled immediately.

- ECM abnormality
- TP sensor abnormality
- APP sensor abnormality

DIAGNOSIS FUNCTION

- The diagnostic trouble code check is possible with the "CRUISE" indicator light.
- To facilitate the system check, check the service data output with the M.U.T.-III.

NOTE: For diagnostic items, service data output items, and check method, refer to the Service Manual.

EMISSION CONTROL

GENERAL DESCRIPTION

M2171000101024

The following changes have been made to the controls of the 2.4L engine provided on the GALANT.

Improvement / Additions	Remark
Addition of HC trap catalytic converter <California>	HC decrease

SYSTEM CONFIGURATION DIAGRAM

<Except for California>

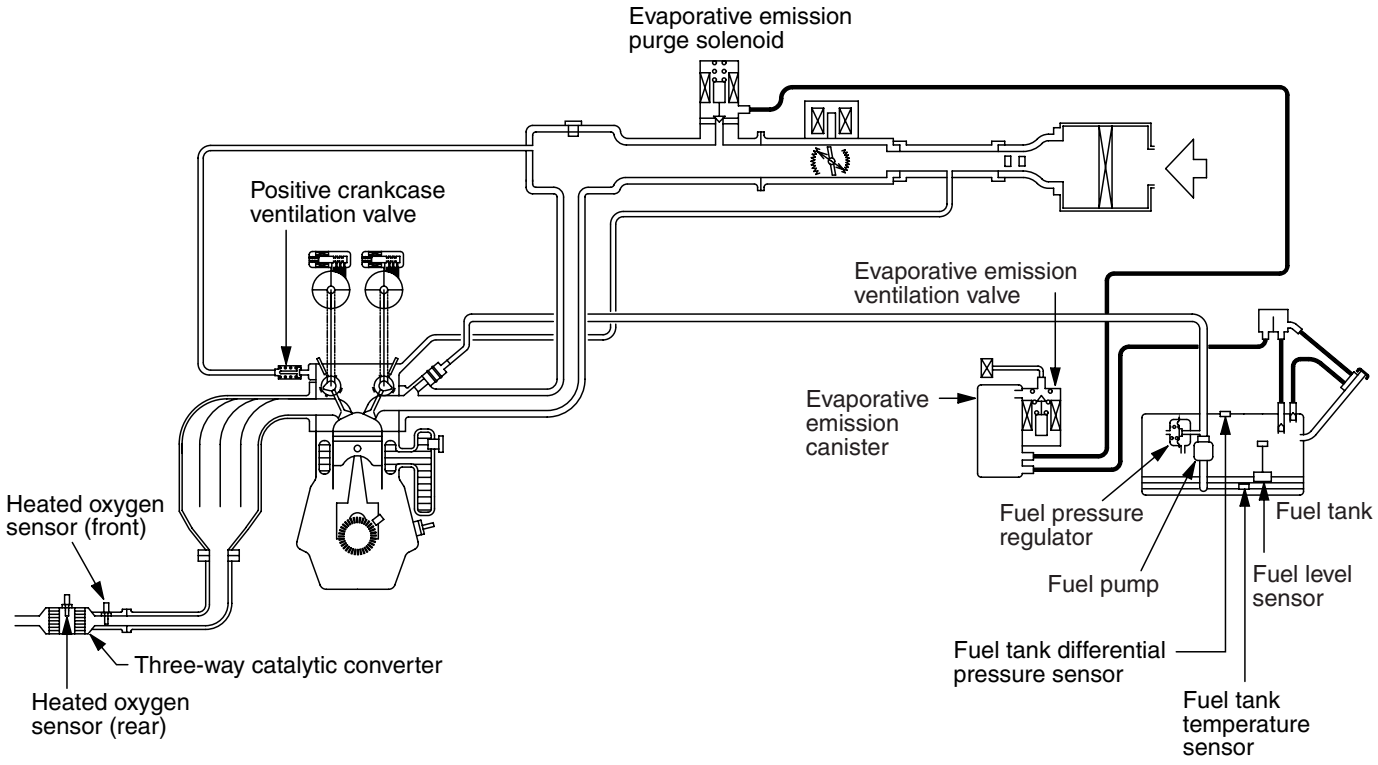

AK604140AB

<California>

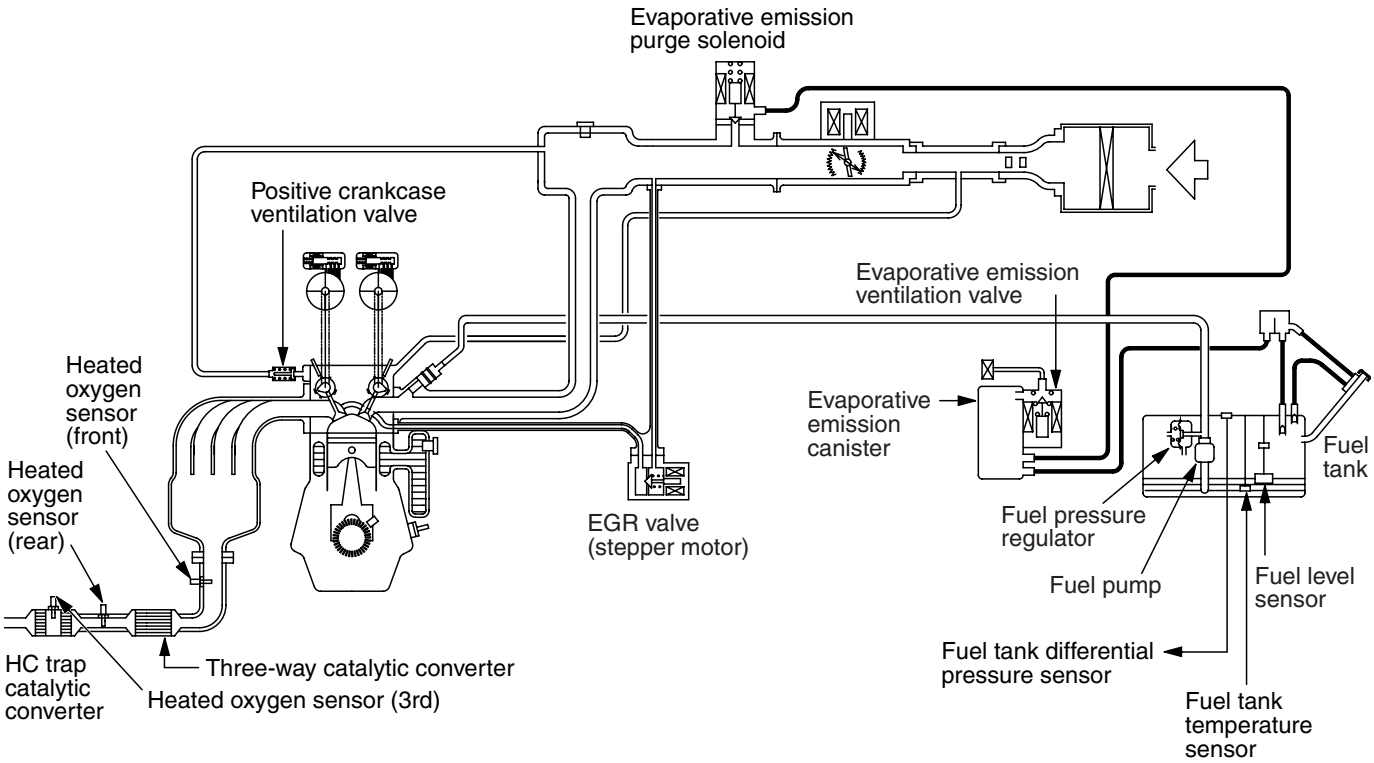

Exhaust gas cleaning devices list

System	Objective / Function	Composition parts
Crankcase ventilation system	HC decrease Re-combustion of blow-by gas.	Positive crankcase ventilation (PCV) valve
Evaporative emission control system	HC decrease Re-combustion of fuel vapor gas.	• Canister • Evaporative emission purge solenoid
Exhaust gas recirculation (EGR) system <California>	NOx decrease Reduce NOx generation by controlling EGR volume according to engine warm-up condition and driving conditions.	EGR valve

System		Objective / Function	Composition parts
Emission reduction systems	Air-fuel ratio feedback control	Decrease of CO, HC and NOx Controls air-fuel ratio of air-fuel mixture to become theoretical air-fuel ratio (about 14.7), which is when the 3-way catalytic converter's cleaning performance is best. It also controls optimum fuel supply based on coolant temperature, driving conditions etc.	• ECM • Mass airflow sensor • Injectors • Heated oxygen sensor • Crankshaft position sensor etc.
	Catalytic converter	Decrease of CO, HC and NOx It facilitates oxidation of CO and HC and reduction of NOx so that all 3 component gases are cleaned simultaneously.	Monolith catalyst
	HC trap catalytic converter <California>	HC decrease During cold operation of engine, exhaust HC is temporarily absorbed. And then Exhaust HC is released when temperature reaches to level at which catalyst is activated. This allows HC to be reduced.	Monolith catalyst

CRANKCASE VENTILATION SYSTEM

M2171000400129

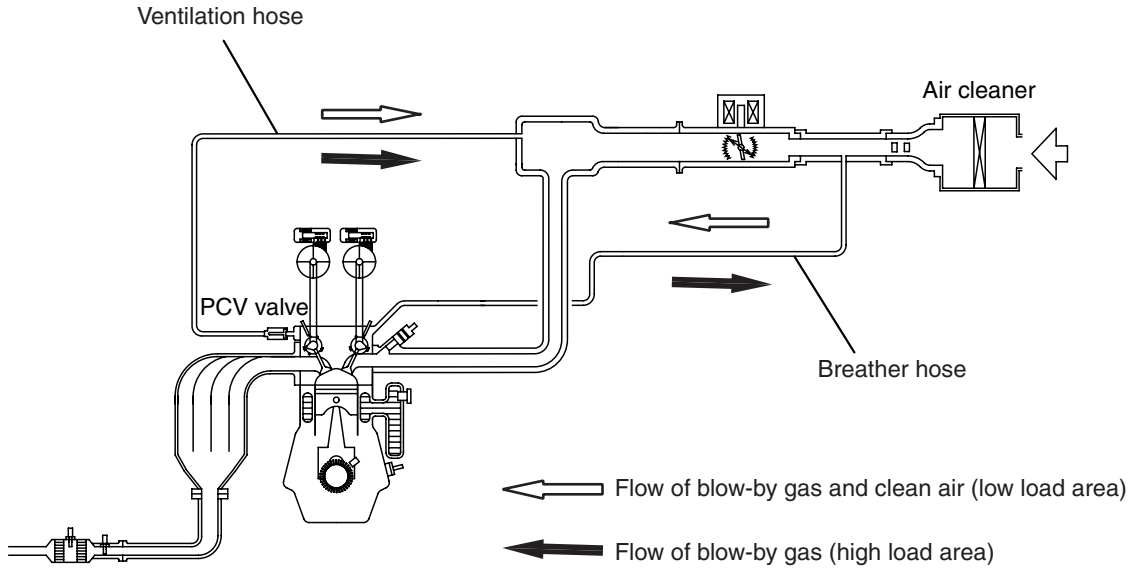

AK604142AB

A blow-by gas reduction device prevents blow-by gas from being expelled into the atmosphere and is of closed type. A positive crankcase ventilation (PCV) valve is provided in the ventilation hose from the rocker cover to the intake manifold. During low load driving, clean air is supplied to the crankcase by the air intake hose via the breather hose and rocker cover, and it mixes with the blow-by gas in the crankcase. The blow-by gas in the crankcase is induced to the intake manifold through the rocker cover and PCV valve. During high load driving, blow-by gas in the crankcase is induced to the intake manifold through the rocker cover and PCV valve and at the same time also via the air intake hose and throttle body due to negative pressure in the air cleaner.

POSITIVE CRANKCASE VENTILATION (PCV) VALVE

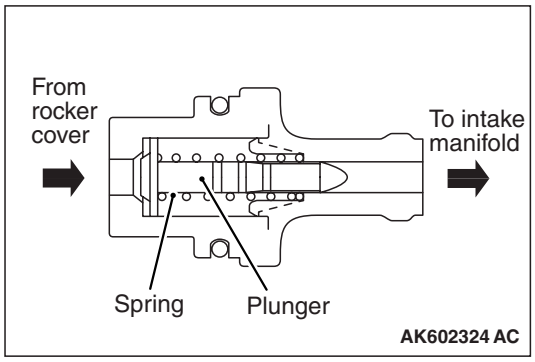

PCV valve lifts the plunger according to negative pressure in the intake manifold to create appropriate ventilation for the crankcase.

EVAPORATIVE EMISSION CONTROL SYSTEM

M2171000200147

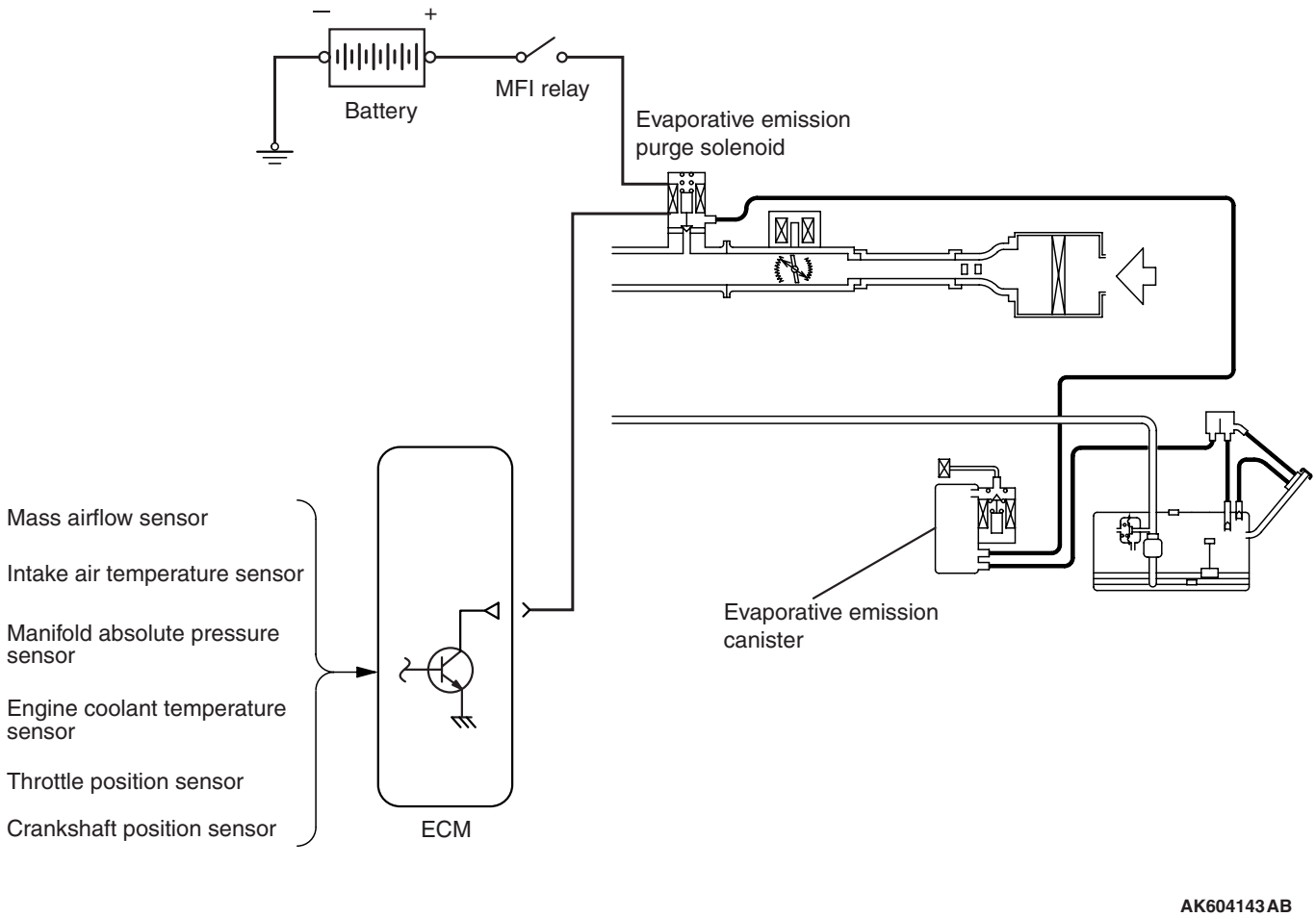

HC (hydrocarbon) generated in the fuel tank are adsorbed by the active carbon in the canister and stored. HC stored in the canister is introduced to the intake manifold when engine is in operation where it is mixed with intake air and combusted. ECM introduces optimum HC amount according to driving conditions and so performs duty control on the evaporative emission purge solenoid. Also, the evaporative emission purge solenoid is closed during deceleration or immediately after engine start to restrict change in air-fuel ratio and prevent engine from stalling.

EVAPORATIVE EMISSION PURGE SOLENOID

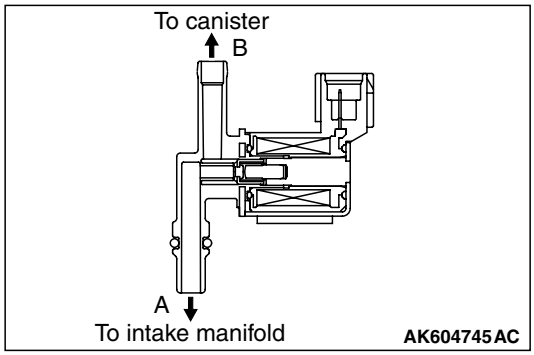

An evaporative emission purge solenoid is installed in the intake manifold.The evaporative emission purge solenoid controls the intake volume of fuel vapor gas from the canister. The evaporative emission purge solenoid is a duty control type solenoid valve. When current is not passing through the coil, nipple A is kept airtight and fuel vapor gas cannot be sucked in. When current passes through the coil, air can pass between nipple A and B and fuel vapor gas is sucked in. ECM changes the ON duty ratio according to engine's operating condition to control the intake volume of fuel vapor gas.

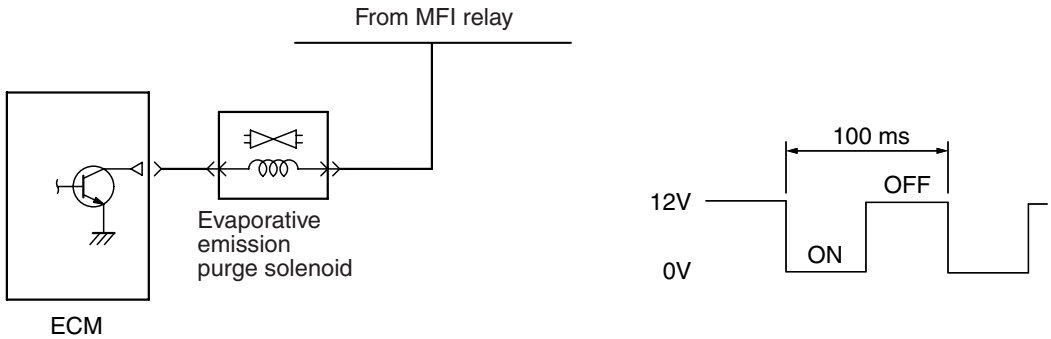

AK602245AD

EXHAUST GAS RECIRCULATION (EGR) SYSTEM <California>

M2171000300122

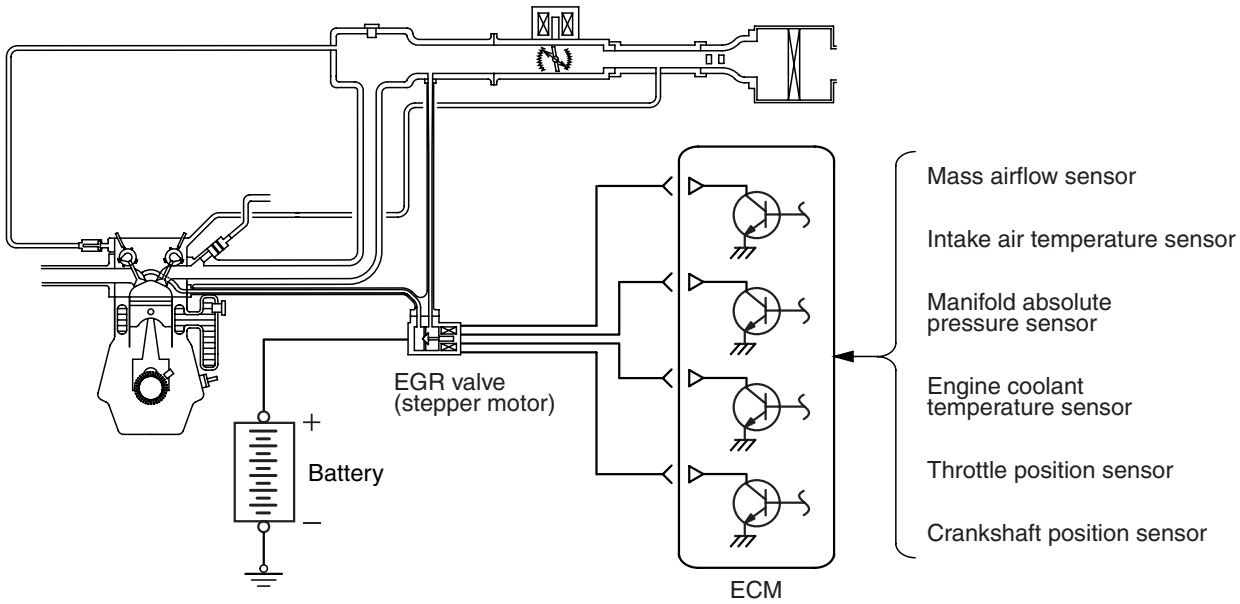

AK502987AE

When the combustion gas temperature becomes high, generation of the environment polluting NOx (nitrogen oxides) increases rapidly. EGR system is used to decrease the volume of NOx generated. EGR system re-circulates exhaust gas inside the intake manifold. It increases specific heat of the combustion gases and reduces combustion speed to lower the combustion temperature and reduce the volume of NOx generated. ECM calculates the EGR introduction volume according to engine operating conditions and controls the EGR valve opening angle at optimum. Also, immediately after the ignition switch ON signal is input, it drives fully closed stepper motor and performs initialization.

EXHAUST GAS RECIRCULATION (EGR) VALVE

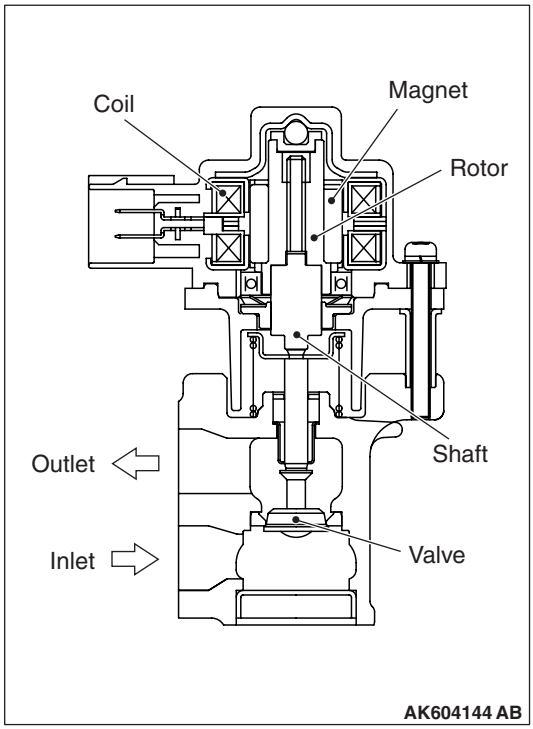

An EGR valve is installed in the EGR valve support.The EGR valve controls EGR flow volume using the stepper motor method and reduces exhaust gas (NOx) and fuel consumption. The EGR valve drives the stepper motor based on the signal from ECM. When stepper motor rotor turns in clockwise or anti-clockwise direction, the shaft fitted with a rotor and a screw expands and contracts and the movement of the shaft causes the valve to go up and down. Thus, EGR path gap is controlled minutely. The stepper motor turns 15° per step. The stepper motor turns forward or back only up to the angle dictated by the number of pulse signals (number of steps) from the ECM. In other words, increase and decrease of the EGR flow volume depends on the number of signals (number of steps) from ECM. ECM changes current flow to the 4 coils (A, B, C, D) in the stepper motor in sequence according to the phase pattern in the following chart in order to turn the stepper motor rotor. Open valve changes phase in order of 0 →1 →2 →3 →0. Close valve changes phase in order of 3 →2 →1 →0 →3.

Phase number	Stepper motor coil			
	Coil A	Coil B	Coil C	Coil D
0	ON	OFF	OFF	ON
1	ON	OFF	ON	OFF
2	OFF	ON	ON	OFF
3	OFF	ON	OFF	ON

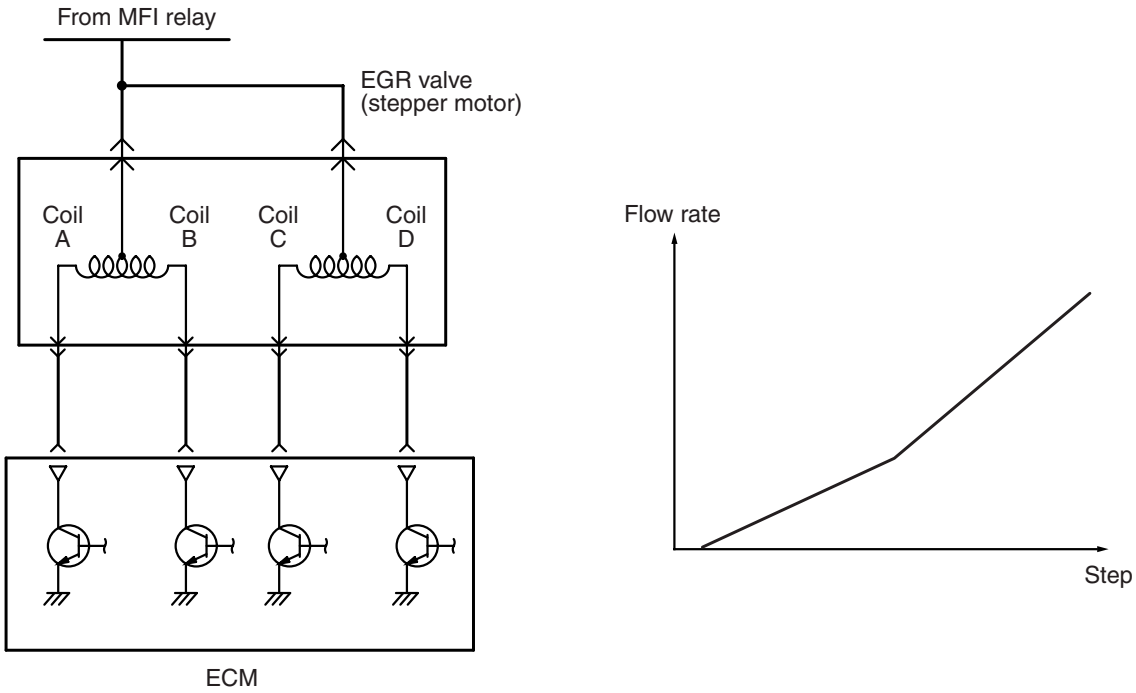

EMISSION REDUCTION SYSTEMS

M2171000800064

These decrease CO, HC and NOx in the exhaust gases and consist of air-fuel ratio feedback control and catalytic converter.

1. AIR-FUEL RATIO FEEDBACK CONTROL

Refer to GROUP 13A –Fuel Injection Control P.13A-29.

2. CATALYTIC CONVERTER

Catalytic converter is installed in the center of exhaust pipe below the floor and in the front of exhaust pipe <California>. Based on appropriate air-fuel ratio feedback from oxygen sensor, CO and HC are oxidized and NOx is reduced. Catalytic converter is a monolith with beehive design with catalysts on the unit surface. It is protected by a thermally insulating mat and enclosed in a shell.

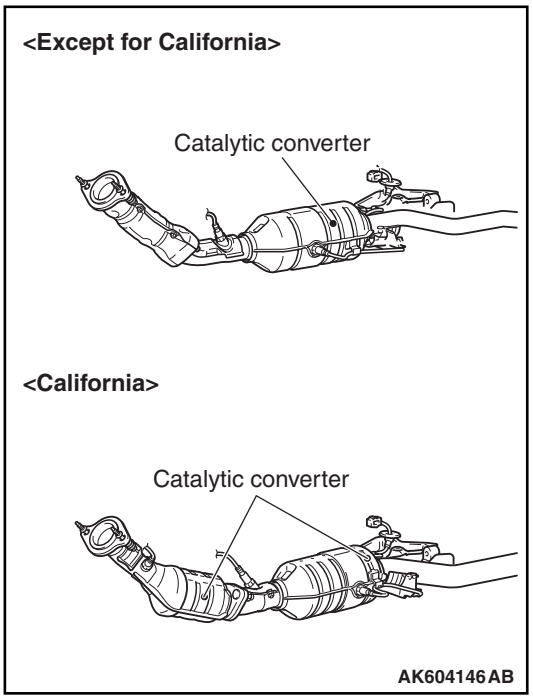

3. HC TRAP CATALYTIC CONVERTER <California>

The HC trap catalytic converter is installed in the center of exhaust pipe below the floor. The HC trap catalytic converter consists of the HC trap catalyst and the three-way catalysts, which are the monolith type; the catalyst element is attached to the honeycomb catalyst surface. The HC trap catalyst and the three-way catalysts are held by the heat-insulating mat and installed in the shell. The HC trap catalyst temporarily absorbs the exhaust HC from the engine within the temperature range in which the three-way catalyst is not activated, and prevents the exhaust HC from releasing outside the vehicle. After that, the HC trap catalyst temperature rises and releases the absorbed HC. The released HC is burnt out in the downstream three-way catalyst.

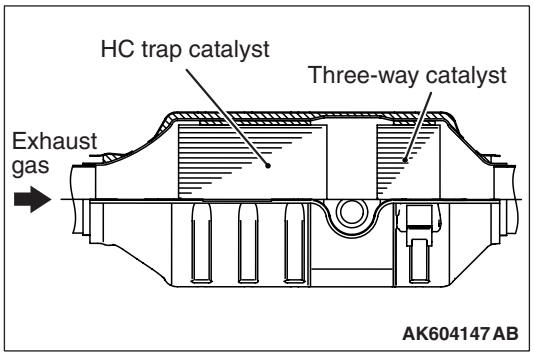

HEATED OXYGEN SENSOR (3RD)

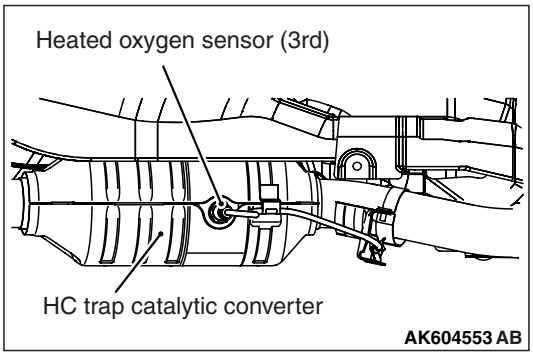

The heated oxygen sensor (3rd) is installed to the HC trap catalytic converter. The heated oxygen sensor (3rd) detects the oxygen density of the exhaust gas and outputs the voltage to the ECM in accordance with the oxygen density.
The ECM uses this output voltage to detect the deterioration of the HC trap catalytic converter. The structure of the heated oxygen sensor (3rd) is the same as that of the heated oxygen sensor (rear) installed in the exhaust pipe.

HC TRAP CATALYTIC CONVERTER DETERIORATION MONITOR

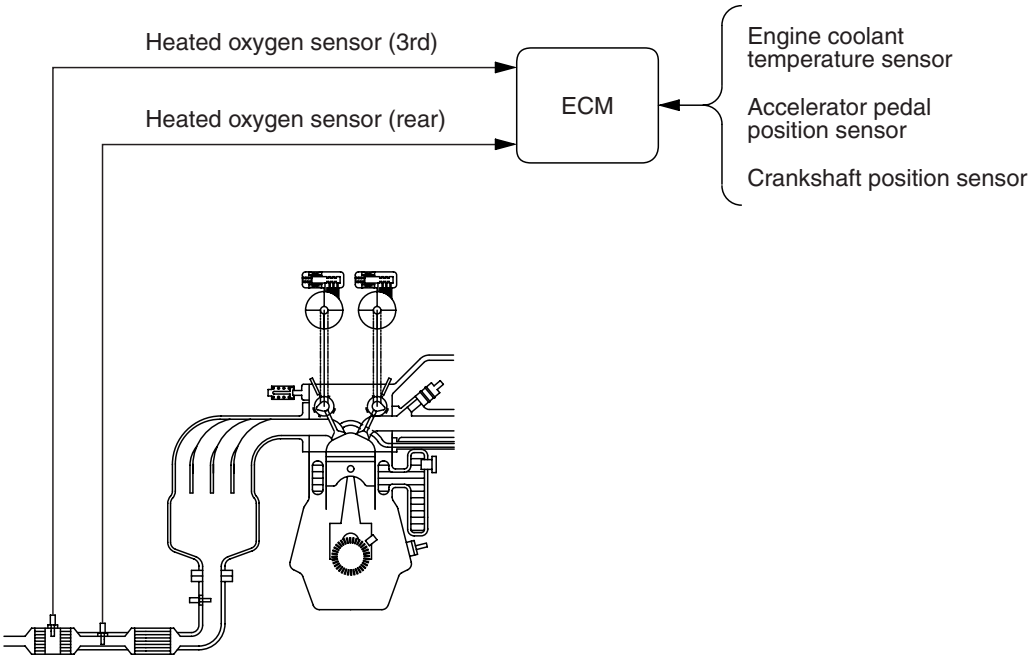

AK604148 AB

The ECM detects the deterioration of the HC trap catalytic converter.
When reaching the certain operating range, the ECM begins monitoring the difference in the feedback time between the heated oxygen sensor (rear) on the upstream of the HC trap catalyst and the heated oxygen sensor (3rd) on the downstream of the HC trap catalyst. This monitoring allows the ECM to detect the deterioration of the HC trap catalytic converter.

NOTES

GROUP 16

ENGINE ELECTRICAL

CONTENTS

STARTER MOTOR 16-2
ALTERNATOR 16-2
IGNITION COIL 16-2
SPARK PLUG 16-3

STARTER MOTOR

M2161002000160

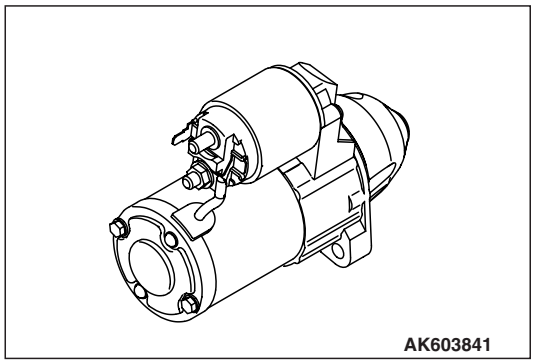

The starter motor is a reduction drive planetary gear type.

ALTERNATOR

M2162001000126

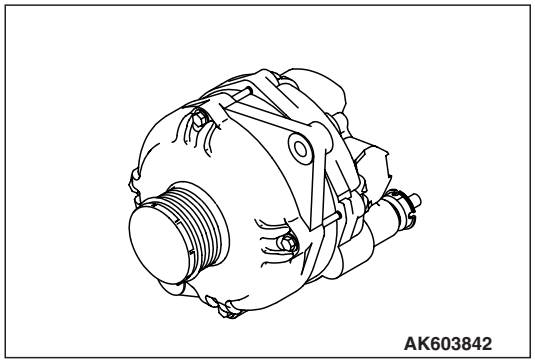

The alternator is a battery detection type.
It uses a pulley with a one-way clutch.

IGNITION COIL

M2163001000174

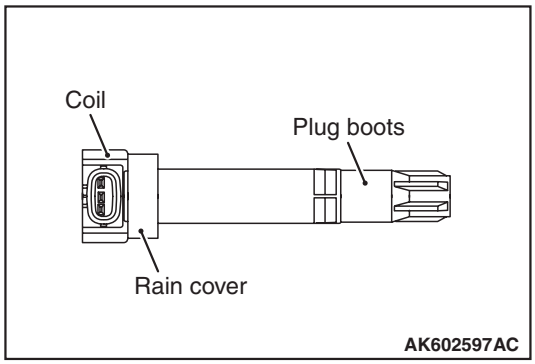

The ignition coil is a plug-top type.

SPARK PLUG

M2163005000068

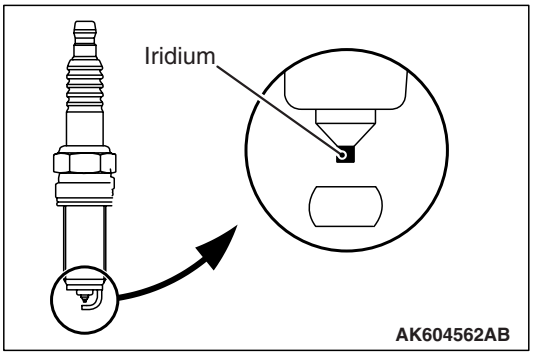

Iridium-tipped spark plugs are used.

NOTES

GROUP 15

INTAKE AND EXHAUST

CONTENTS

AIR DUCT AND AIR CLEANER 15-2
INTAKE MANIFOLD 15-3
EXHAUST MANIFOLD 15-4
EXHAUST PIPE AND MUFFLER 15-4

AIR DUCT AND AIR CLEANER

M2150004000656

A front air intake system that actively sucks cooling air from the front through the top of the radiator has been adopted in order to improve engine performance and reduce air intake noise.

CONSTRUCTION DIAGRAM

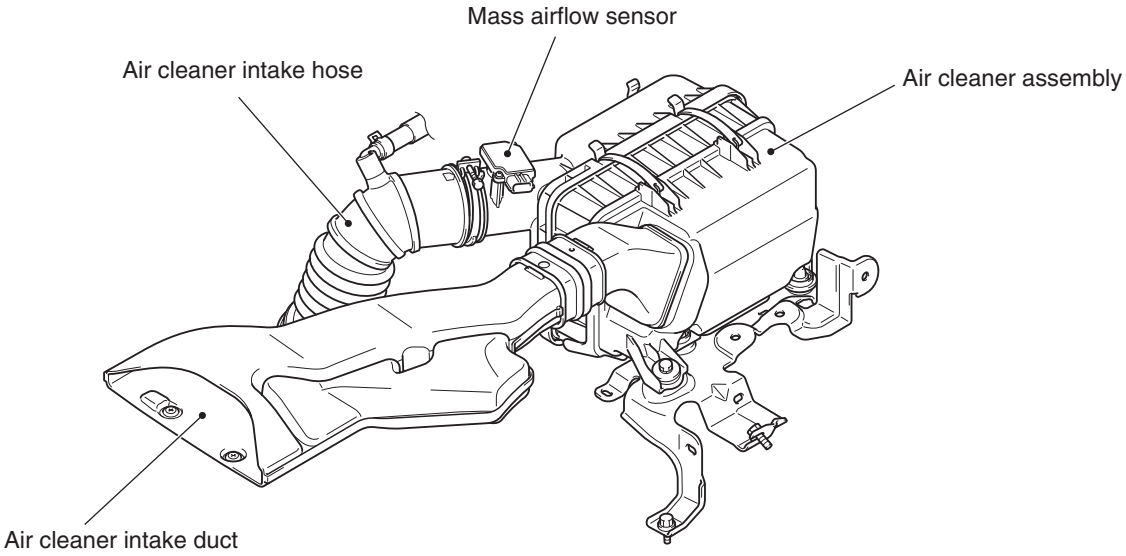

AC608342AB

INTAKE MANIFOLD

M2150005000239

The intake manifold is made of plastic for weight reduction, and the surface roughness of the inner walls of the ports has been improved to reduce intake resistance.

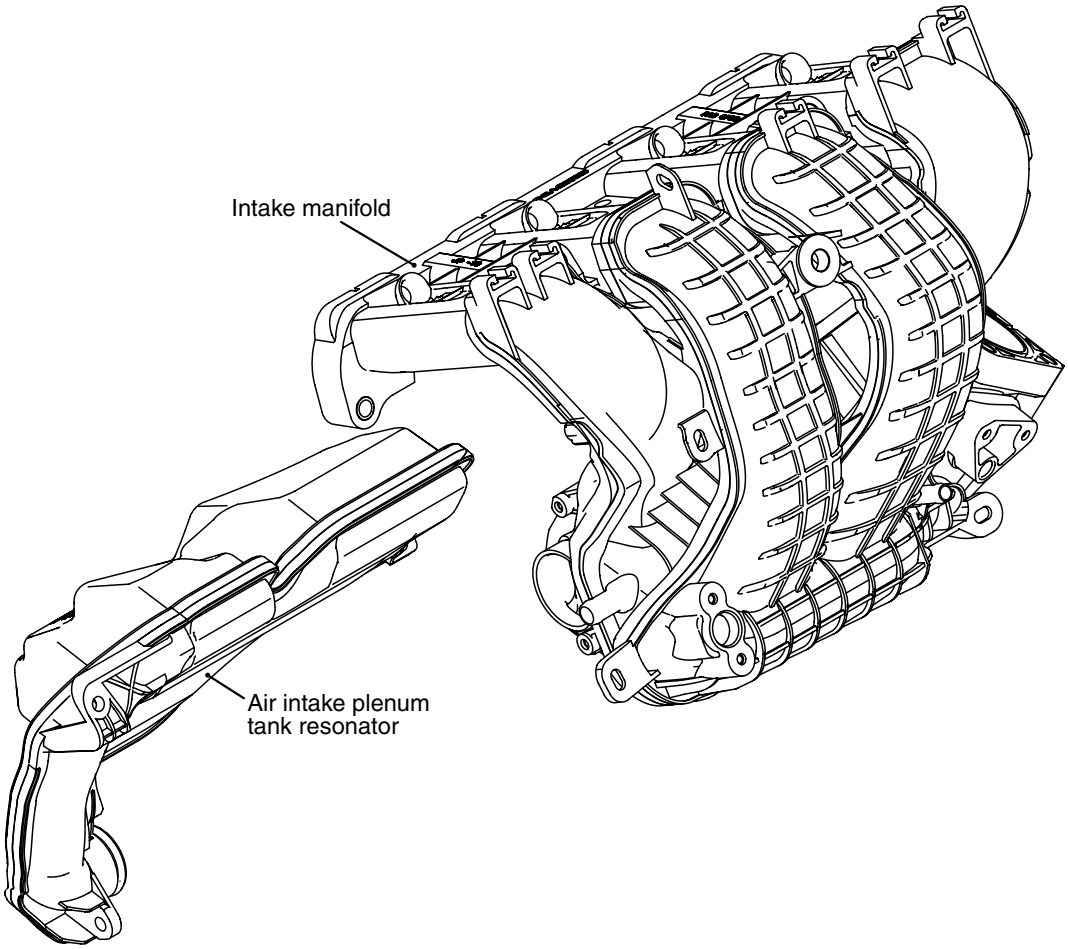

AK502555AD

EXHAUST MANIFOLD

M2150006000566

<California>
A clamshell type exhaust manifold is used.

<Except California>
A SUS pipe type exhaust manifold is used.

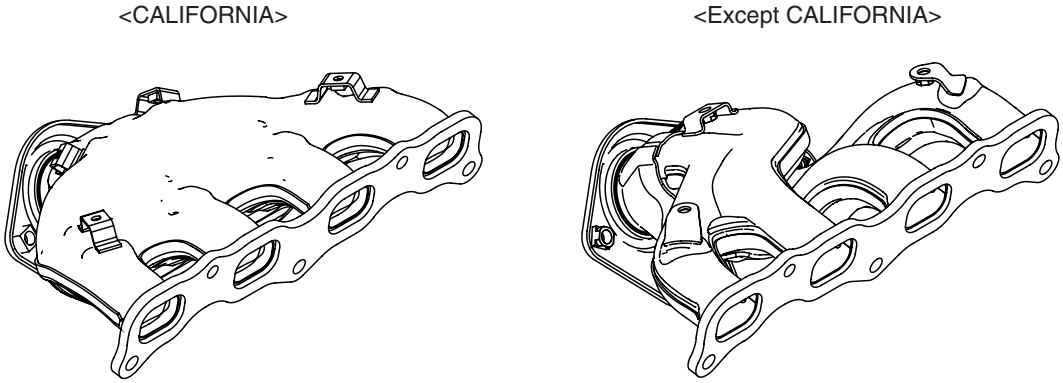

EXHAUST PIPE AND MUFFLER

M2150003000783

The exhaust system is composed of the front exhaust pipe, center exhaust pipe, and main muffler, and it has the following characteristics.

- Fewer, more environmentally-friendly rubber hangers to reduce vibration from exhaust system.
- Straighter exhaust pipe to reduce noise.

CONSTRUCTION DIAGRAM

<Except for California>

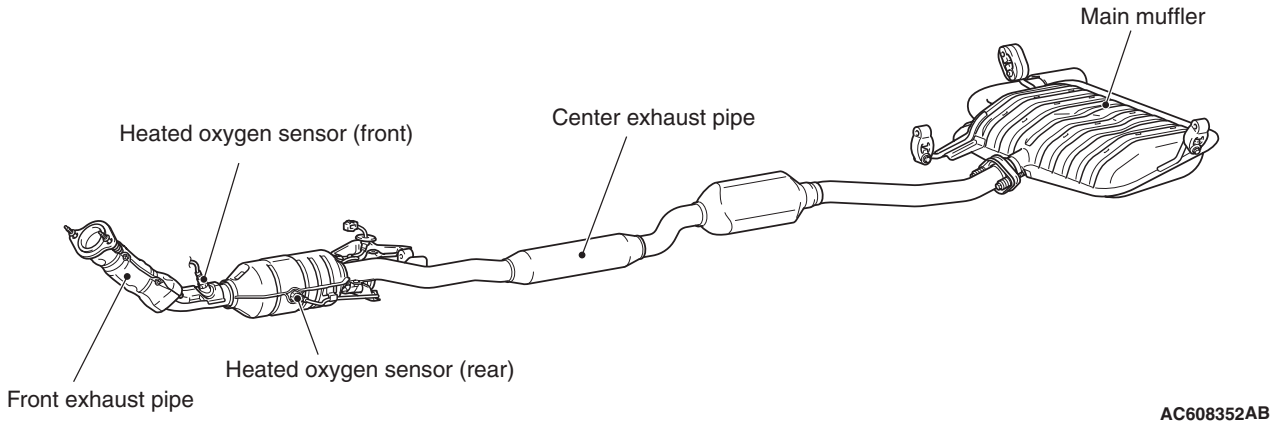

<Vehicles for California>

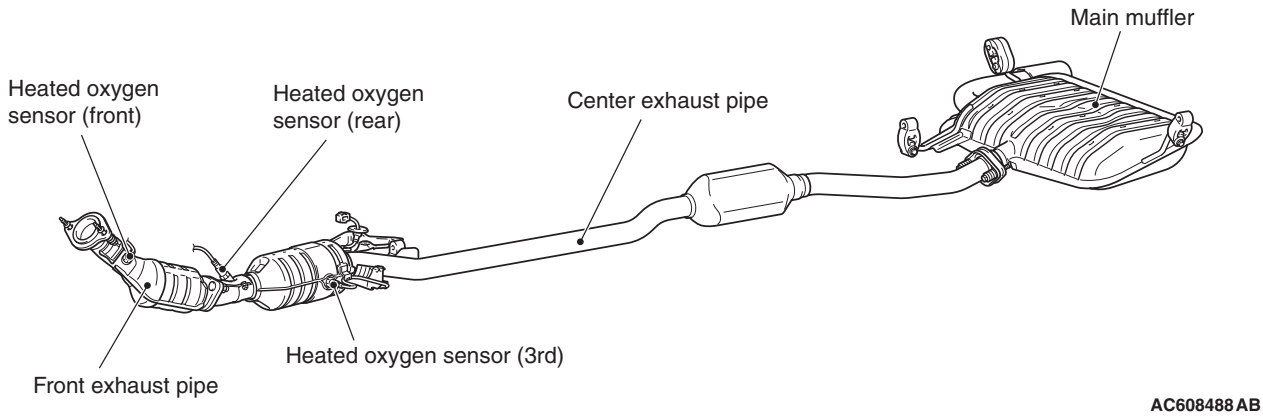

GROUP 14

ENGINE COOLING

CONTENTS

GENERAL INFORMATION 14-2
WATER PASSAGE 14-3
WATER PUMP 14-3

GENERAL INFORMATION

M2140000100780

The cooling system is a water-cooled pressurized, forced circulation type which offers the following features.

- To stabilize engine coolant temperature, the thermostat is located at the coolant inlet port from the radiator.
- To improve engine cooling performance and save weight, a plastic tank and aluminum radiator fins are used.

SPECIFICATIONS

Item		Specification
Cooling method		Water-cooled pressurized, forced circulation with electrical fan
Radiator	Type	Pressurized corrugate type
	Performance kJ/h (kcal/h)	222,480 (53,148)
Water pump	Type	Centrifugal impeller
	Drive method	Drive belt
Thermostat	Type	Wax pellet with jiggle valve
	Valve open temperature °C (°F)	82 (180)

CONSTRUCTION DIAGRAM

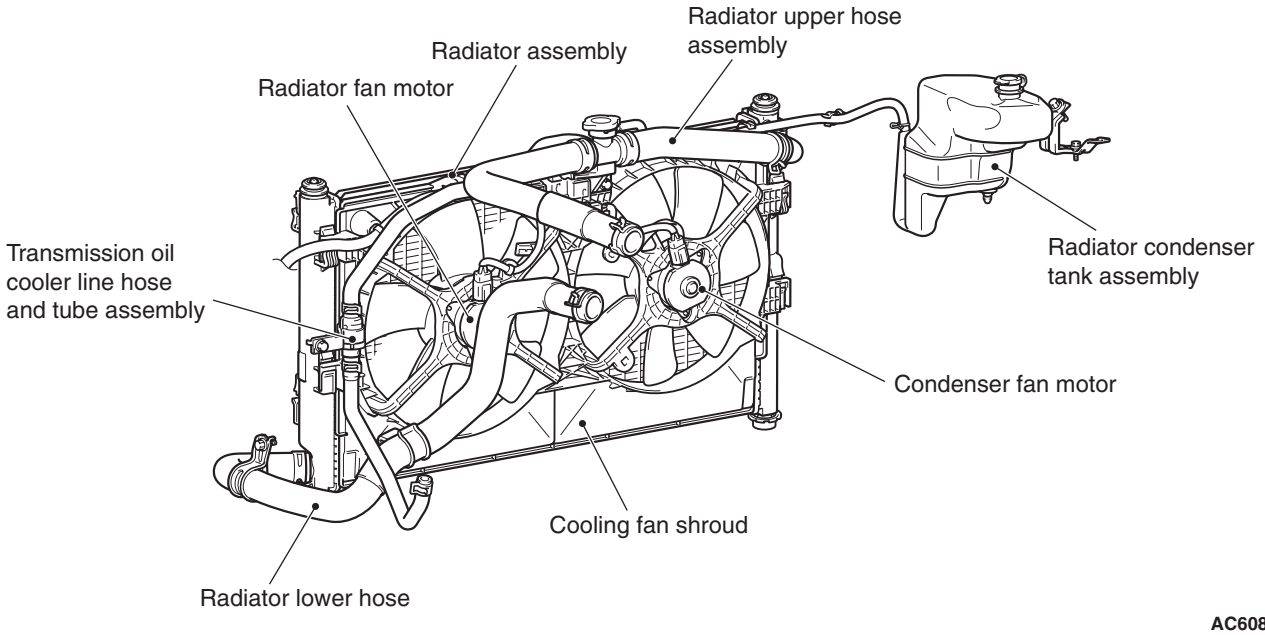

AC608448AB

WATER PASSAGE

M2140004000172

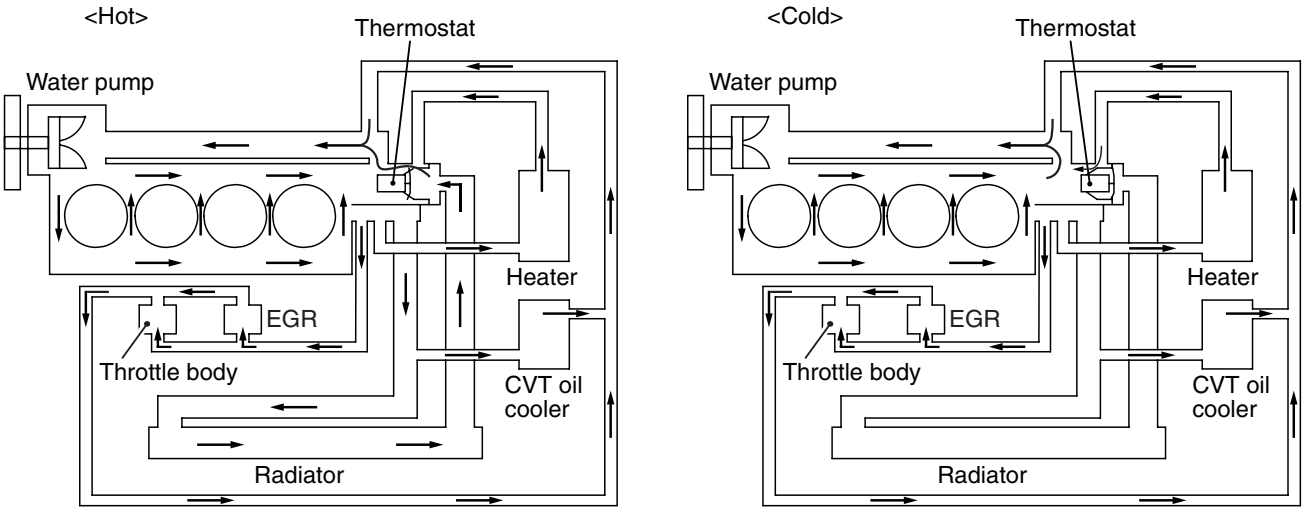

AK603624AB

NOTE: EGR: Exhaust Gas Recirculation <California only>
CVT: Continuously Variable Transmission

WATER PUMP

M2140003000168

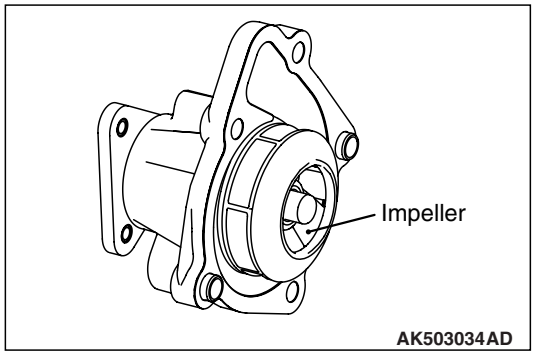

AK503034AD

The water pump is the centrifugal, impeller type that is installed in front of the cylinder block. It is driven by the drive belt.

Item	Specifications
Discharge volume L/min	185
Impeller diameter mm (in)	62 (2.4)
Pulley outer diameter mm (in)	137 (5.4)

NOTES

GROUP 13B

FUEL SUPPLY

CONTENTS

GENERAL INFORMATION 13B-2
FUEL TANK 13B-3

GENERAL INFORMATION

M2134000100833

The fuel system consists of the following components:

- Fuel injector
- Fuel rail
- Fuel pipe
- Fuel tank
- Fuel pump module
- Evaporative emission canister

SPECIFICATIONS

Item		Specification
Fuel tank capacity dm^3 (gal)		59 (15.5)
Fuel pump type		Electric
Fuel filter type		Cartridge (incorporates fuel pump module)
Fuel return system		Returnless
Fuel pump pressure regulator pressure kPa (psi)		324 (46)
Fuel injector	Type	Elector-magnetic
	Quantity	4
Evaporative emission control system		Canister

CONSTRUCTION DIAGRAM

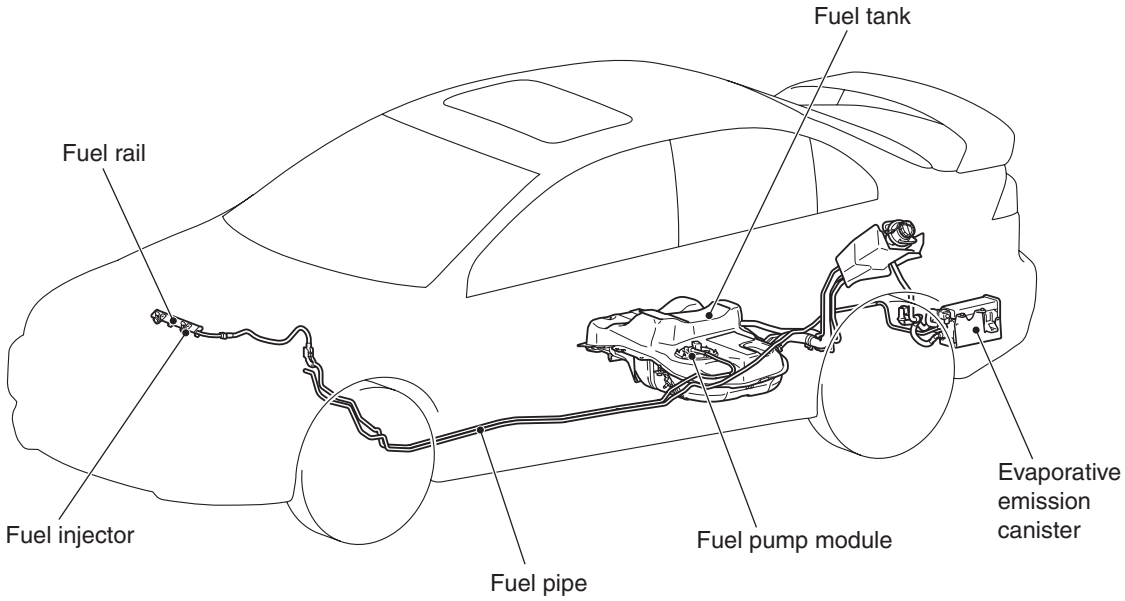

AC610224 AB

This fuel system is designed with consideration for global environment protection to ensure safety at a collision, reduce weight, and improve reliability and quality. This system has the following features:

- A quick-joint connector of a plastic tube is used for the fuel high-pressure hoses in the engine compartment to reduce the permeation of fuel evaporative emission.
- The surface of underfloor fuel pipes is coated with 1-mm thickness of plastic to improve resistance to corrosion and chipping.
- A returnless fuel system eliminates returned fuel from the engine. The heat that fuel receives from the engine is reduced, minimizing fuel temperature in the fuel tank and controlling the amount of evaporated gas.

FUEL TANK

M2134001000817

The fuel tank assembly consists of the fuel pump module, the fuel tank, and so on, and features the following characteristics:

- The fuel tank is mounted underneath the second seat to improve safety at a collision.
- The fuel tank itself is made of a pre-coat zinc alloy galvanised steel sheet that contains no lead.
- The capacity of the fuel tank is 59 dm^3 (15.5 gal) to meet long-distance drives.
- The fuel cut-off valve, fuel tank leveling valve and fuel tube have been installed using in-tank construction to reduce the amount of evaporated fuel from hoses.

The fuel pump module consists of the following components:

- Fuel pump
- Fuel level sensor
- Fuel filter
- Fuel pump pressure regulator
- Fuel tank differential pressure sensor
- Fuel tank temperature sensor

CONSTRUCTION DIAGRAM

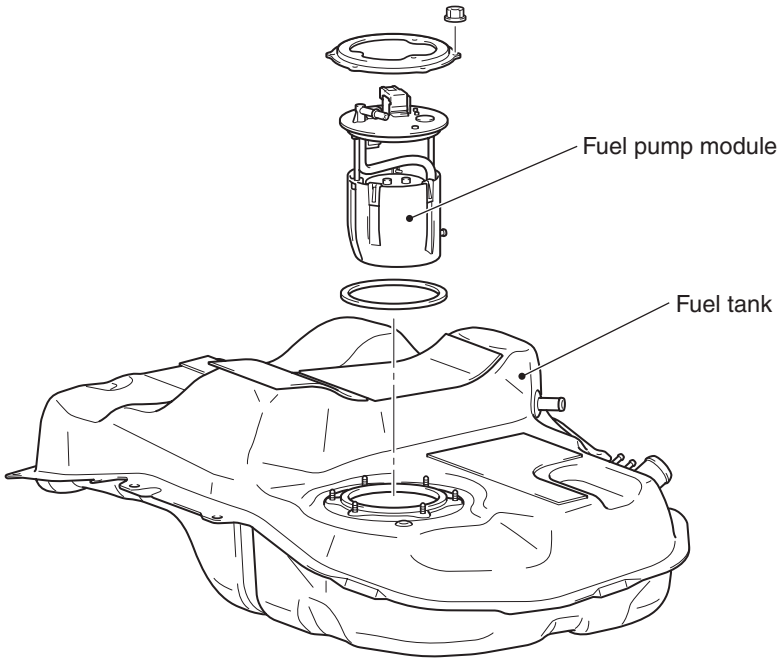

AC610225AB

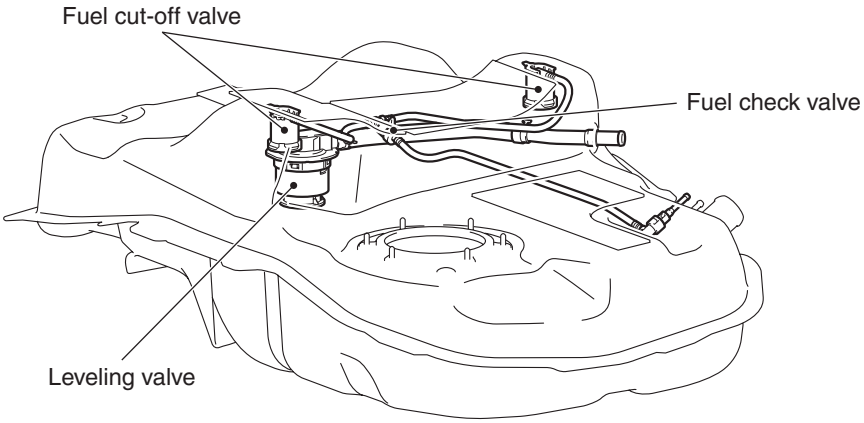

AC610226AC

NOTES

GROUP 13A

MULTIPORT FUEL SYSTEM (MFI)

CONTENTS

GENERAL DESCRIPTION. 13A-2

CONTROL UNIT. 13A-6

SENSOR. 13A-8

ACTUATOR 13A-23

FUEL INJECTION CONTROL 13A-29

IGNITION TIMING AND CONTROL FOR CURRENT CARRYING TIME 13A-35

THROTTLE VALVE OPENING ANGLE CONTROL AND IDLE SPEED CONTROL 13A-38

MIVEC (Mitsubishi Innovative Valve Timing Electronic Control System). 13A-40

MULTIPORT FUEL INJECTION (MFI) RELAY CONTROL. 13A-45

FUEL PUMP RELAY CONTROL. . . . 13A-46

STARTER RELAY CONTROL. 13A-47

HEATED OXYGEN SENSOR HEATER CONTROL. 13A-49

A/C COMPRESSOR RELAY CONTROL. 13A-50

GENERATOR CONTROL. 13A-51

EVAPORATIVE EMISSION CONTROL SYSTEM INCORRECT PURGE FLOW MONITOR 13A-52

EXHAUST GAS RECIRCULATION CONTROL. 13A-53

CONTROLLER AREA NETWORK (CAN) 13A-53

EVAPORATIVE EMISSION PURGE CONTROL. 13A-53

HC TRAP CATALYTIC CONVERTER DETERIORATION MONITOR. 13A-53

ON-BOARD DIAGNOSTICS. 13A-53

GENERAL DESCRIPTION

M2132000101283

Although the control systems are basically the same as those of 2.4L engine used in the GALANT, the following improvements have been added.

Improvement / Additions	Remark
MIVEC, continuously and variably control the intake valve timing and exhaust valve timing, is used.	System optimally control the timing of the intake valve and exhaust valve in accordance with the engine speed and load.
Addition of heated oxygen sensor (3rd) <California>	Detection of the HC trap catalyst malfunction.

System Block Diagram

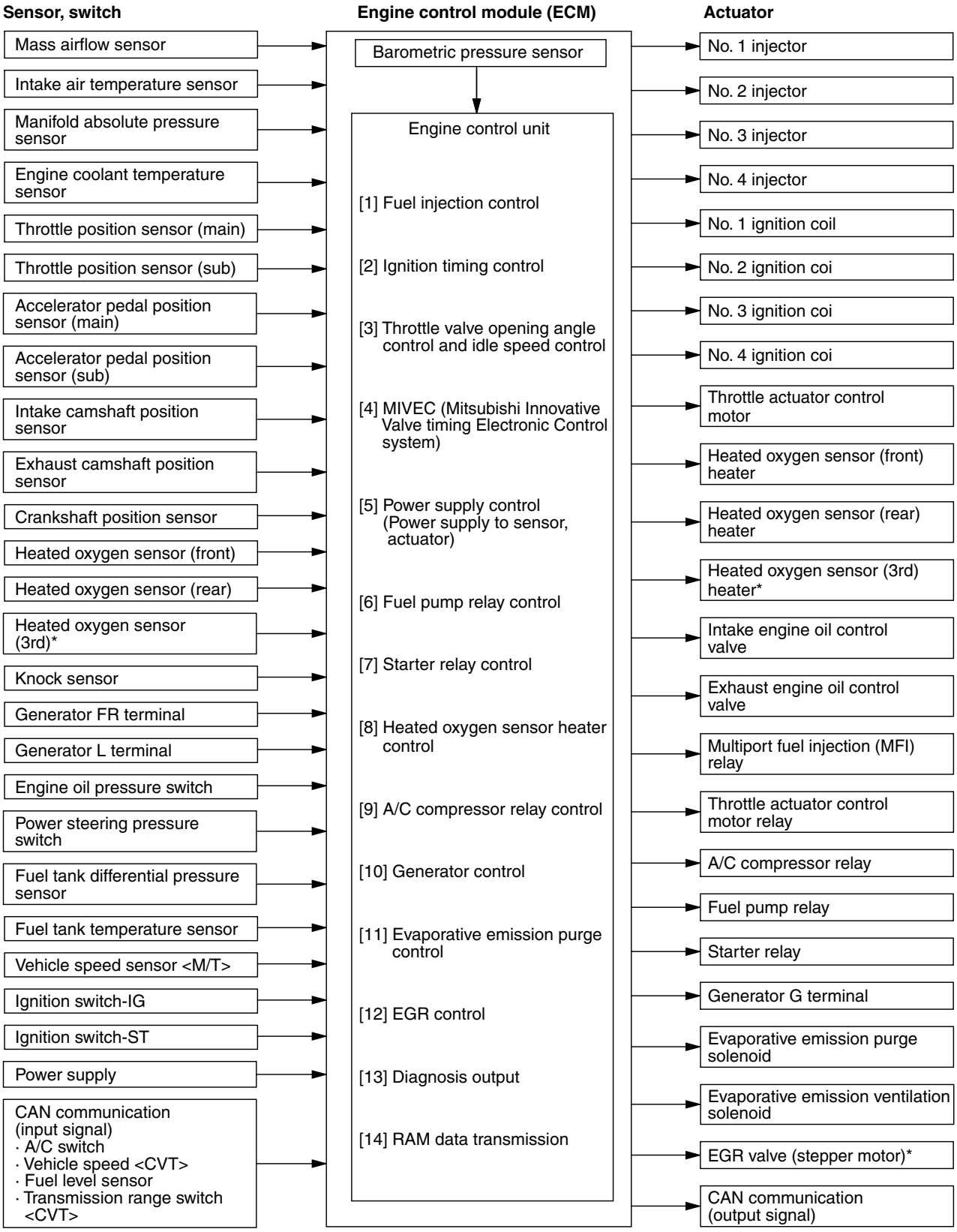

NOTE
*1: California

AK604116 AB

Control System Diagram

<Except for California>

Sense

- ★1 Mass airflow sensor
- ★2 Intake air temperature sensor
- ★3 Throttle position sensor (main/sub)
- ★4 Manifold absolute pressure sensor
- ★5 Engine coolant temperature sensor
- ★6 Intake camshaft position sensor
- ★7 Exhaust camshaft position sensor
- ★8 Crankshaft position sensor
- ★9 Knock sensor
- ★10 Heated oxygen sensor (front)
- ★11 Heated oxygen sensor (rear)
- ★12 Fuel tank differential pressure sensor
- ★13 Fuel tank temperature sensor

- ● Accelerator pedal position sensor (main/sub)
- ● Engine oil pressure switch
- ● Power steering pressure switch
- ● Generator FR terminal
- ● Generator L terminal
- ● Vehicle speed sensor <M/T>
- ● Ignition switch-IG
- ● Ignition switch-ST
- ● Power supply
- ● CAN communication (input signal)

⇨ **Decide**

ECM (with barometric pressure sensor)

⇨ **Act**

- ◆1 Intake engine oil control valve
- ◆2 Exhaust engine oil control valve
- ◆3 Throttle actuator control motor
- ◆4 Injector
- ◆5 Evaporative emission purge solenoid
- ◆6 Evaporative emission ventilation solenoid

- ● Ignition coil, ignition power transistor
- ● Multiport fuel injection (MFI) relay
- ● Fuel pump relay
- ● Starter relay
- ● Throttle actuator control motor relay
- ● Generator G terminal
- ● Heated oxygen sensor heater
- ● A/C compressor relay
- ● Diagnostic output
- ● CAN communication (output signal)

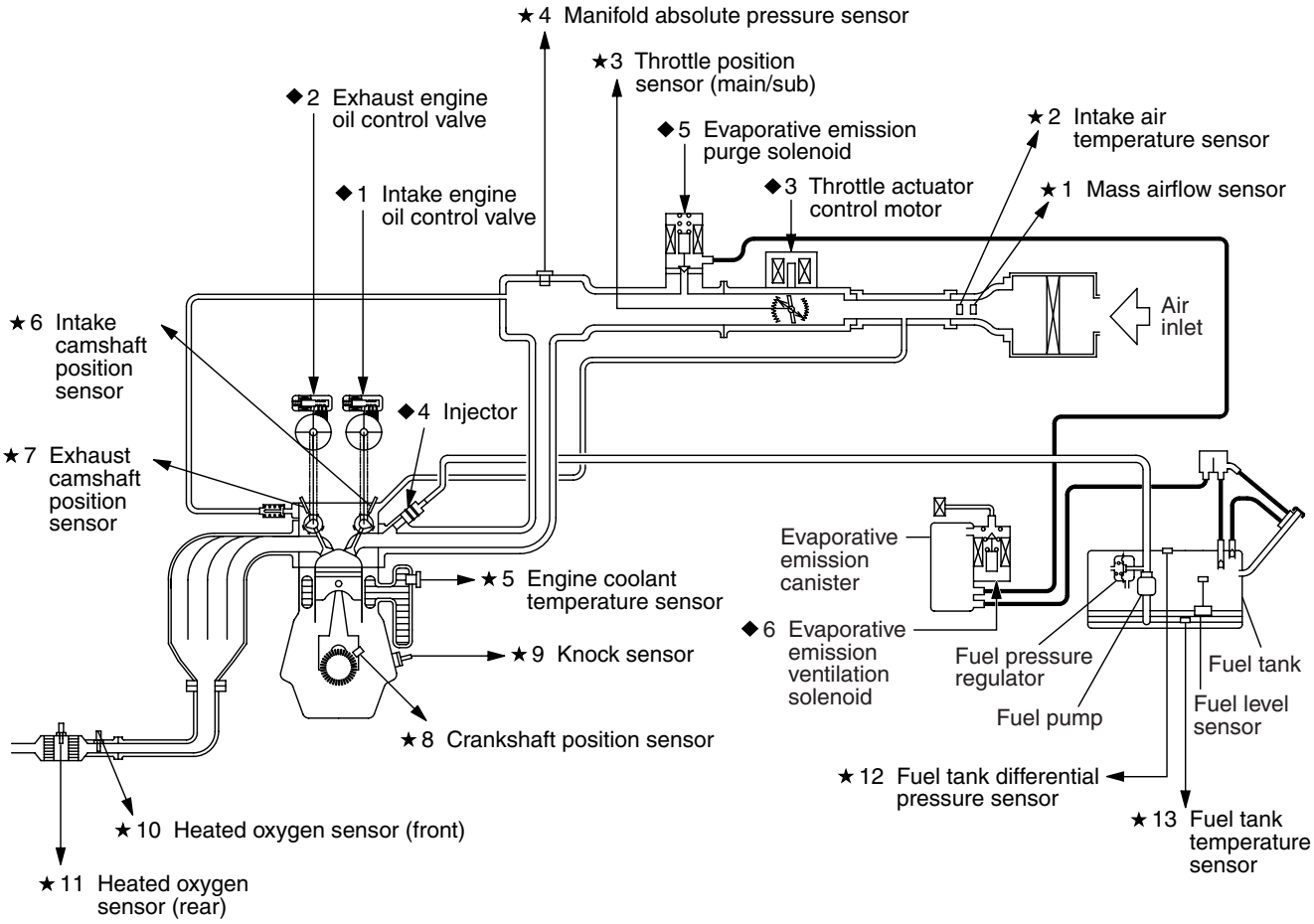

AK604117AB

<California>

Sense

- ★1 Mass airflow sensor
- ★2 Intake air temperature sensor
- ★3 Throttle position sensor (main/sub)
- ★4 Manifold absolute pressure sensor
- ★5 Engine coolant temperature sensor
- ★6 Intake camshaft position sensor
- ★7 Exhaust camshaft position sensor
- ★8 Crankshaft position sensor
- ★9 Knock sensor
- ★10 Heated oxygen sensor (front)
- ★11 Heated oxygen sensor (rear)
- ★12 Heated oxygen sensor (3rd)
- ★13 Fuel tank differential pressure sensor
- ★14 Fuel tank temperature sensor

- ● Accelerator pedal position sensor (main/sub)
- ● Engine oil pressure switch
- ● Power steering pressure switch
- ● Generator FR terminal
- ● Generator L terminal
- ● Vehicle speed sensor <M/T>
- ● Ignition switch-IG
- ● Ignition switch-ST
- ● Power supply
- ● CAN communication (input signal)

⇨ **Decide**

ECM (with barometric pressure sensor)

⇨ **Act**

- ◆1 Intake engine oil control valve
- ◆2 Exhaust engine oil control valve
- ◆3 Throttle actuator control motor
- ◆4 Injector
- ◆5 Evaporative emission purge solenoid
- ◆6 Evaporative emission ventilation solenoid
- ◆7 EGR valve (stepper motor)

- ● Ignition coil, ignition power transistor
- ● Multiport fuel injection (MFI) relay
- ● Fuel pump relay
- ● Starter relay
- ● Throttle actuator control motor relay
- ● Generator G terminal
- ● Heated oxygen sensor heater
- ● A/C compressor relay
- ● Diagnostic output
- ● CAN communication (output signal)

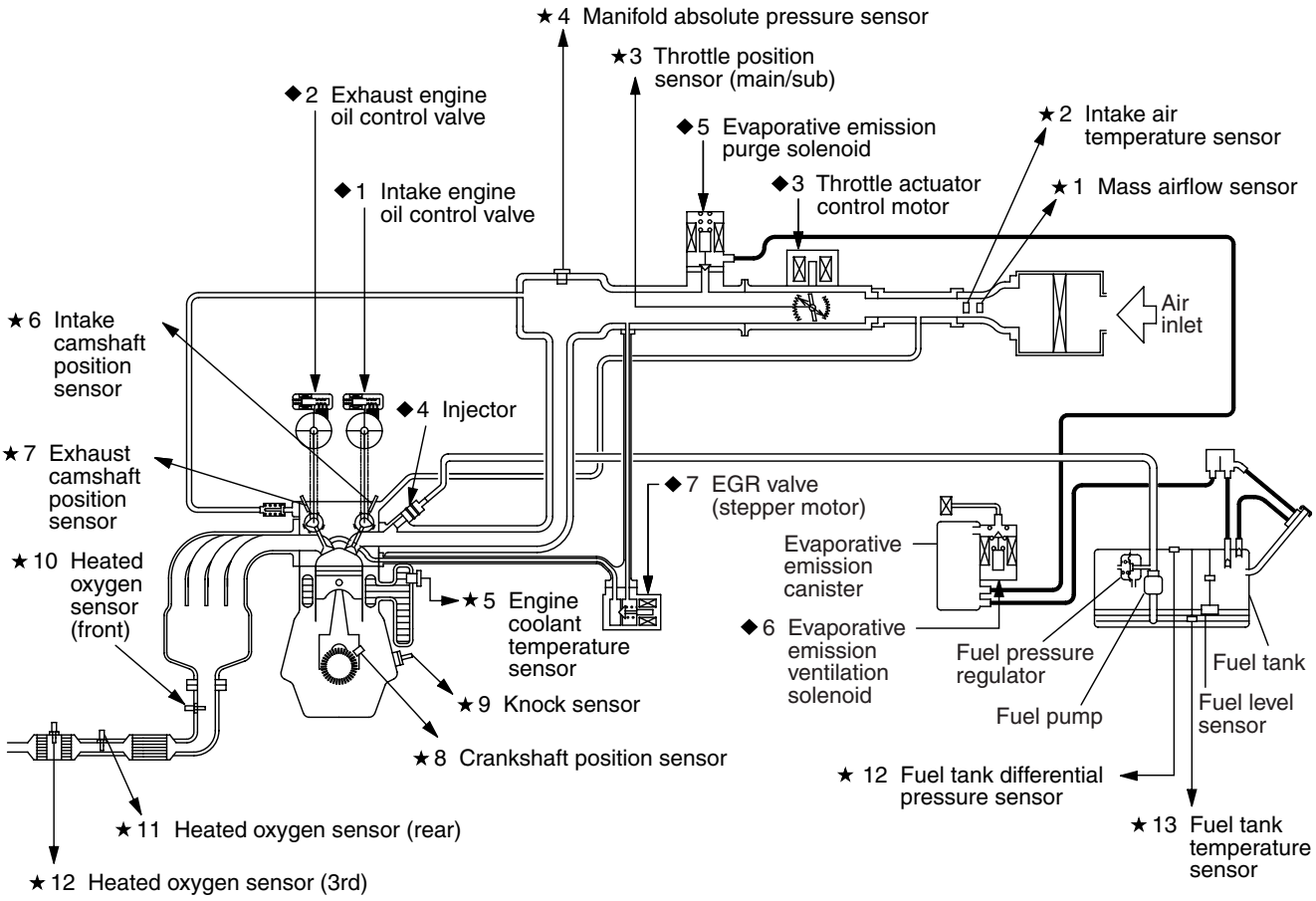

AK604118 AB

CONTROL UNIT

M2132021500153

ENGINE CONTROL MODULE (ECM)

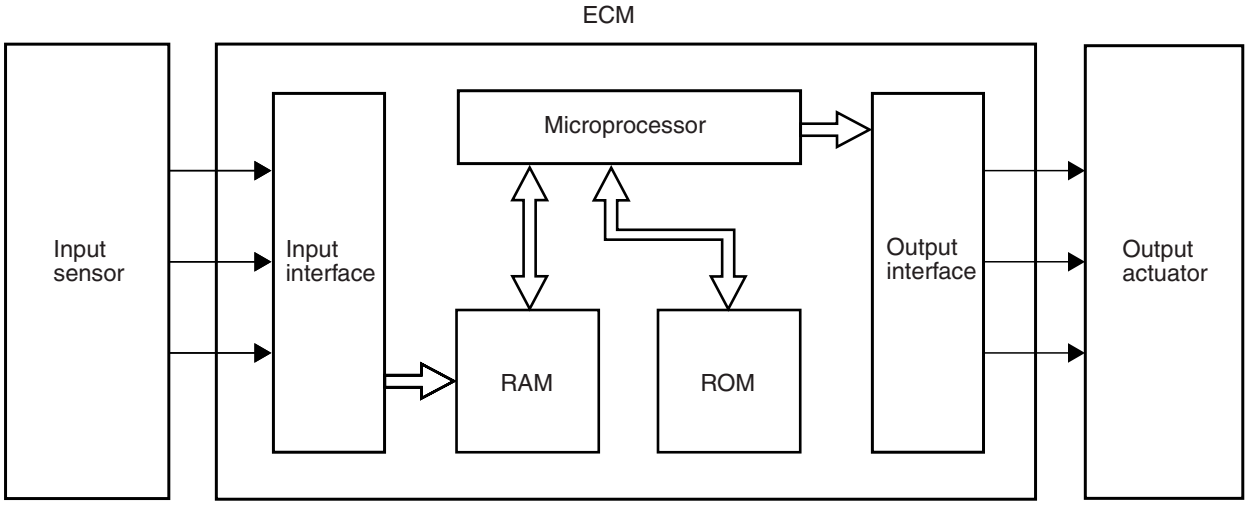

AK604119AB

ECM is installed in the engine room. ECM judges (calculates) the optimum control to deal with the constant minute changes in driving conditions based on information input from the sensors and drives the actuator. ECM is composed of 32-bit microprocessor and Random Access Memory (RAM), Read Only Memory (ROM) and Input /Output interface. ECM uses flash-memory ROM that allows re-writing of data so that change and correction of control data is possible using special tools. It also uses Electrically Erasable Programmable Read Only Memory (EEPROM) so that studied compensation data is not deleted even if battery terminals are disconnected.

SENSOR

M2132001000565

MASS AIRFLOW SENSOR

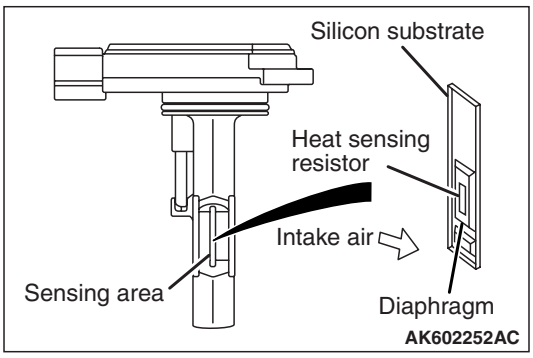

Mass airflow sensor is installed in the air intake hose. Mass airflow sensor is composed of an extremely small heatsensing resistor. The mass airflow sensor controls the amount of electric current flowing into the heat sensing resistor to keep the heat sensing resistor at a constant temperature to the intake air temperature. The faster the air flow speed, the higher the mass flow rate.Because the amount of heat transfer from the heat sensing resistor to the air increases, the mass airflow sensor increases the amount of electric current to the heat sensing resistor. Thus, the amount of electric current increases in accordance with the air mass flow rate. The mass airflow sensor measures the air mass flow rate by detecting the amount of electric current. The mass airflow sensor amplifies the detected electric current amount and outputs it into the ECM. ECM uses this output current and engine speed to calculate and decide basic fuel injection time. Sensor properties are as shown in the figure.

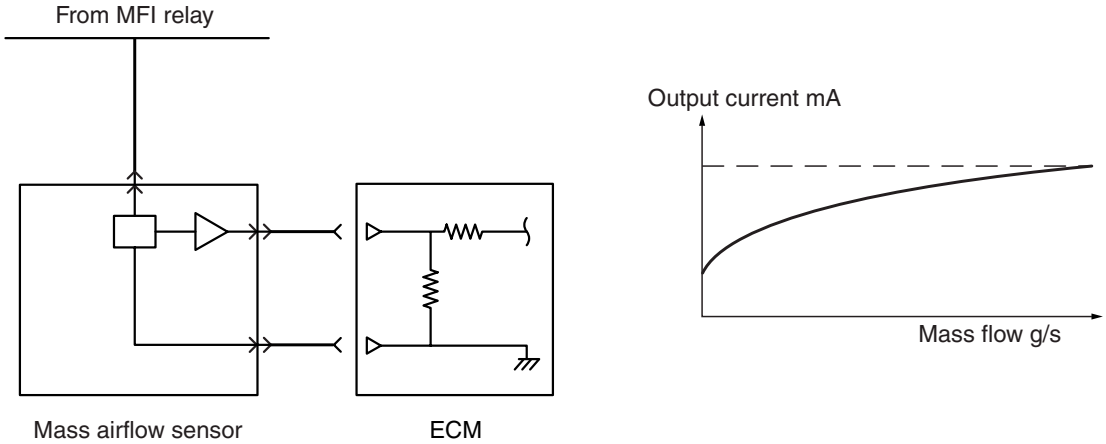

INTAKE AIR TEMPERATURE SENSOR

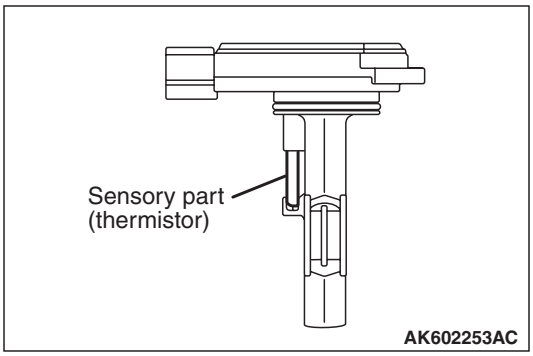

Intake air temperature sensor is built in to the mass airflow sensor. Intake air temperature sensor detects intake air temperature through thermistor's resistance change and outputs the voltage according to intake air temperature to ECM. ECM uses this output voltage to compensate fuel injection control and ignition timing control. Sensor properties are as shown in the figure.

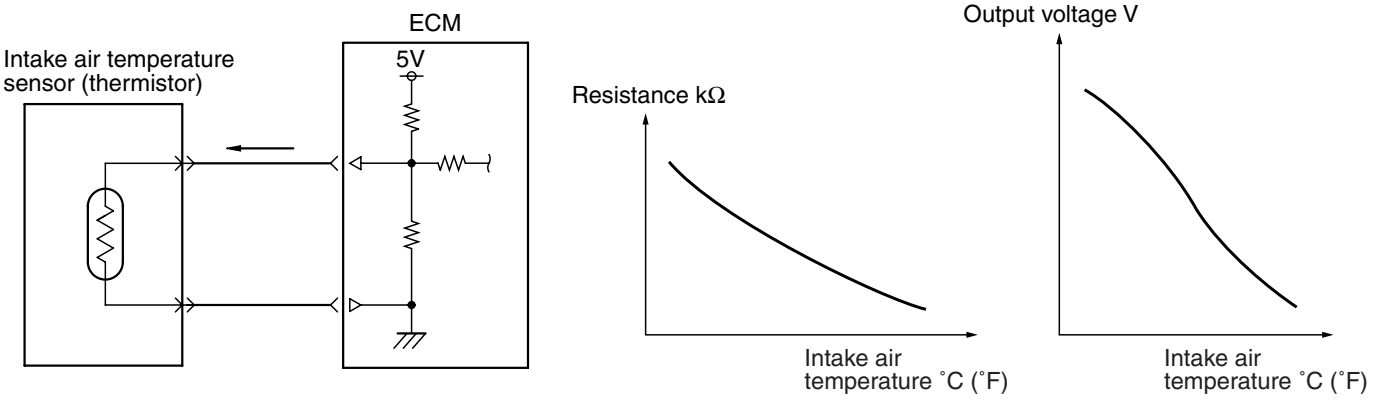

AK602207AG

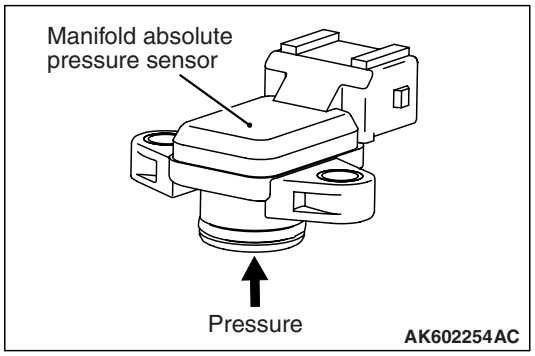

AK602254AC

MANIFOLD ABSOLUTE PRESSURE SENSOR

The manifold absolute pressure sensor is installed in the intake manifold. Manifold absolute pressure sensor uses a piezo resistive semiconductor to output the voltage according to manifold absolute pressure to ECM. ECM uses this output voltage to compensate fuel injection volume according to manifold absolute pressure. Sensor properties are as shown in the figure.

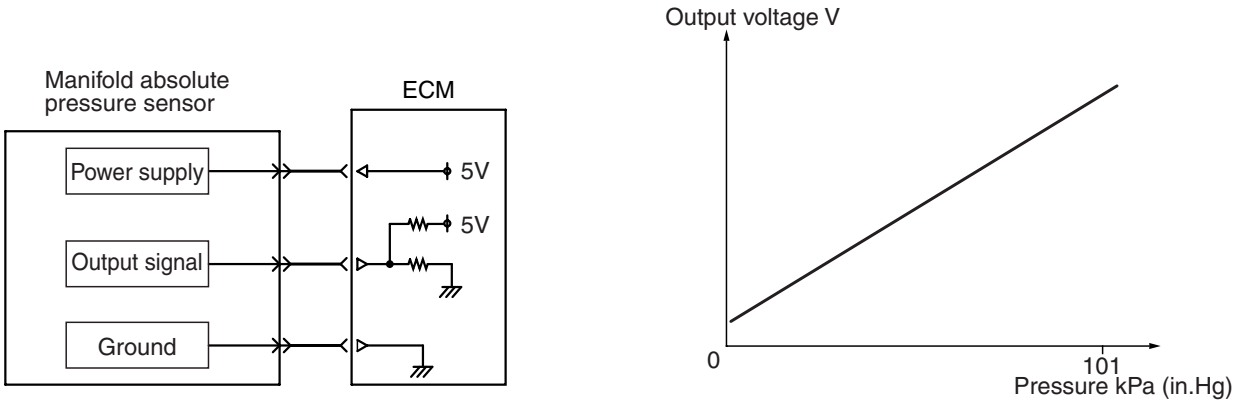

AK602206AH

ENGINE COOLANT TEMPERATURE SENSOR

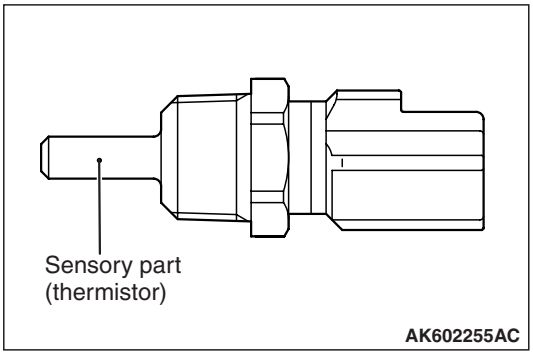

The engine coolant temperature sensor is installed in the thermostat housing. Engine coolant temperature sensor uses thermistor's resistance change to detect coolant temperature and output the voltage according to coolant temperature to ECM. ECM uses this output voltage to appropriately control fuel injection volume, idle speed and ignition timing. Sensor properties are as shown in the figure.

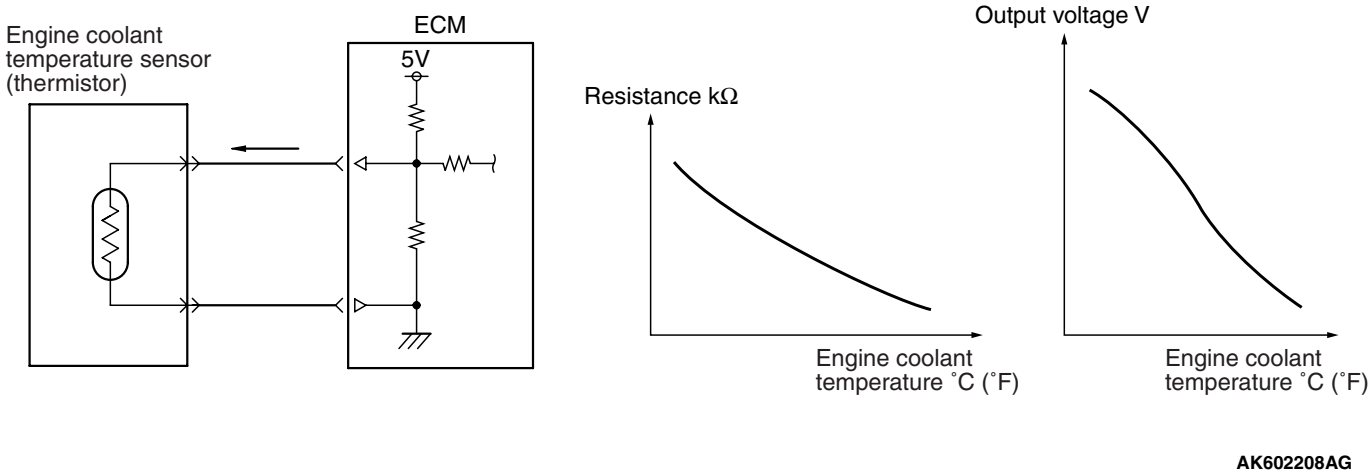

THROTTLE POSITION SENSOR

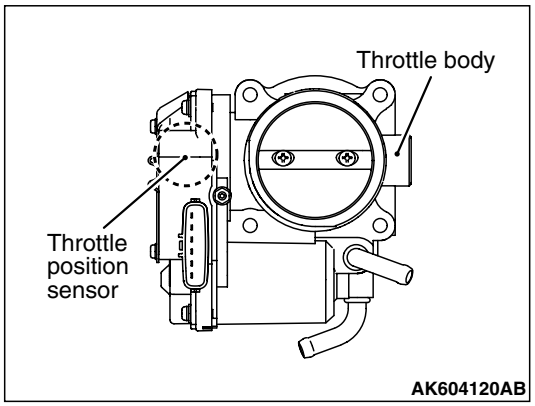

The throttle position sensor is installed in the throttle body. Throttle position sensor outputs voltage to ECM based on the throttle shaft rotation angle. ECM uses this signal to detect the throttle valve opening angle to perform throttle actuator control motor feedback control. This throttle position sensor uses Hall IC and is a non-contact type.

STRUCTURE AND SYSTEM

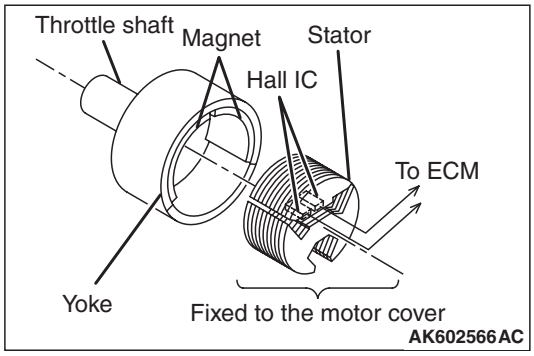

Throttle position sensor is composed of a permanent magnet fixed on the throttle shaft, Hall IC that outputs voltage according to magnetic flux density and a stator that efficiently introduces magnetic flux from the permanent magnet to Hall IC.

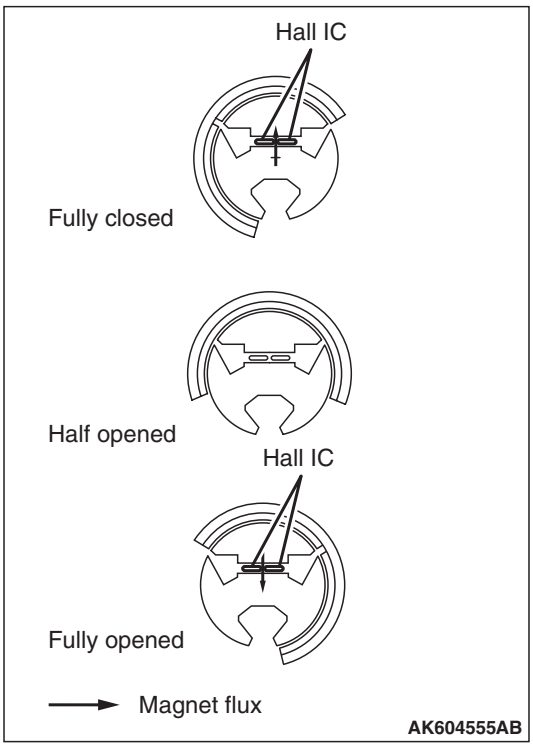

Magnetic flux density at Hall IC is proportional to the output voltage.
Throttle position sensor has 2 output systems –throttle position sensor (main) and throttle position sensor (sub), and the output voltage is output to ECM. When throttle valve turns, output voltage of throttle position sensor (main) and throttle position sensor (sub) changes. This allows ECM to detect actual throttle opening angle. ECM uses this output voltage for throttle actuator control motor feedback control. Also, ECM compares output voltage of the throttle position sensor (main) and throttle position sensor (sub) to check for abnormality in the throttle position sensor. The relationship between throttle opening angle and output voltage of the throttle position sensor (main) and throttle position sensor (sub) is as shown in the figure below.

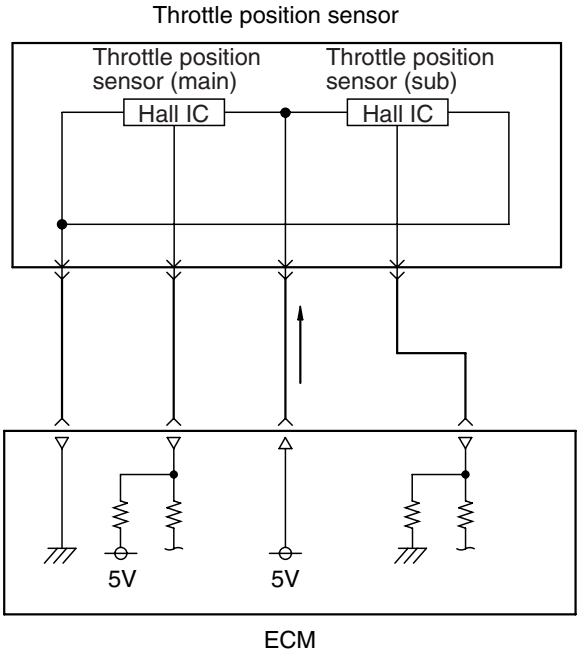

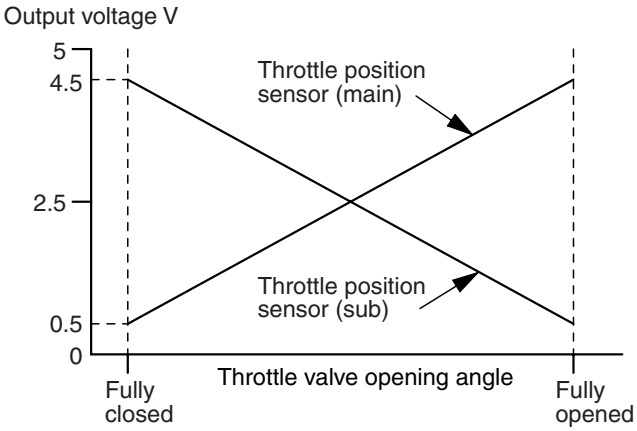

AK602222AE

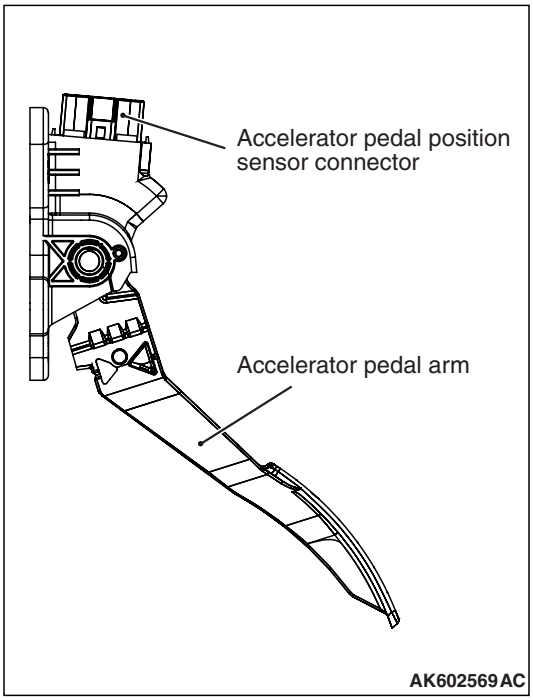

AK602569AC

ACCELERATOR PEDAL POSITION SENSOR

Accelerator pedal position sensor is integrated with accelerator pedal, and detects accelerator opening angle. ECM uses the output voltage of this sensor to control appropriate throttle valve opening angle and fuel injection volume. This accelerator pedal position sensor uses Hall IC and is a non-contact type.

STRUCTURE AND SYSTEM

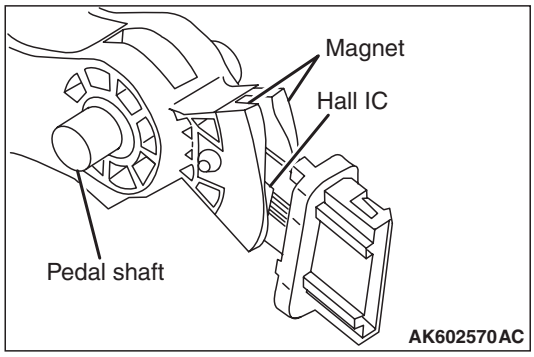

Accelerator pedal position sensor is composed of a permanent magnet fixed on the magnet carrier of the pedal shaft, Hall IC outputs voltage according to magnetic flux density and a stator that efficiently introduces magnetic flux from the permanent magnet to Hall IC.

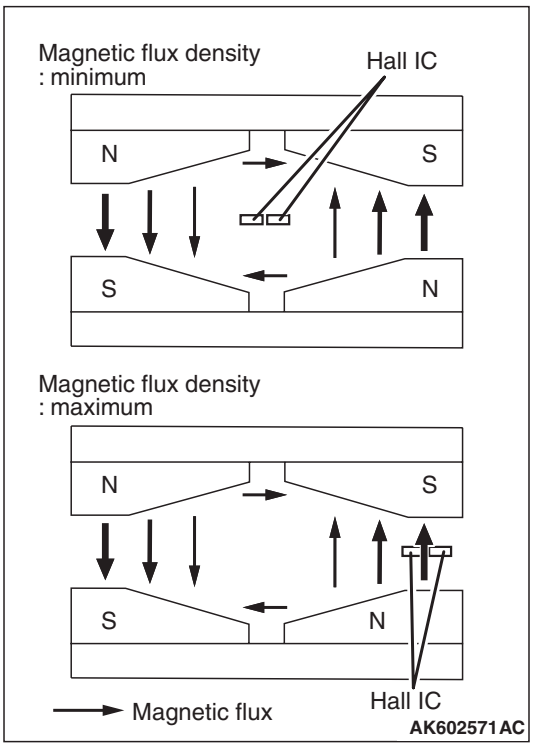

Magnetic flux density at Hall IC is proportional to the output voltage.
The accelerator pedal position sensor has 2 output systems – accelerator pedal position sensor (main) and accelerator pedal position sensor (sub), and the output voltage is output to ECM. According to depression of the accelerator pedal, output voltage of the accelerator pedal position sensor (main) and accelerator pedal position sensor (sub) changes. This allows ECM to detect the actual accelerator pedal depression amount. ECM uses accelerator pedal position sensor (main) output voltage for appropriate throttle valve opening angle control and fuel injection volume control. Also, ECM compares output voltage of the accelerator pedal position sensor (main) and accelerator pedal position sensor (sub) to check for abnormality in sensor. The relationship between accelerator opening angle and output voltage of the accelerator pedal position sensor (main) and accelerator pedal position sensor (sub) is as shown in the figure below.

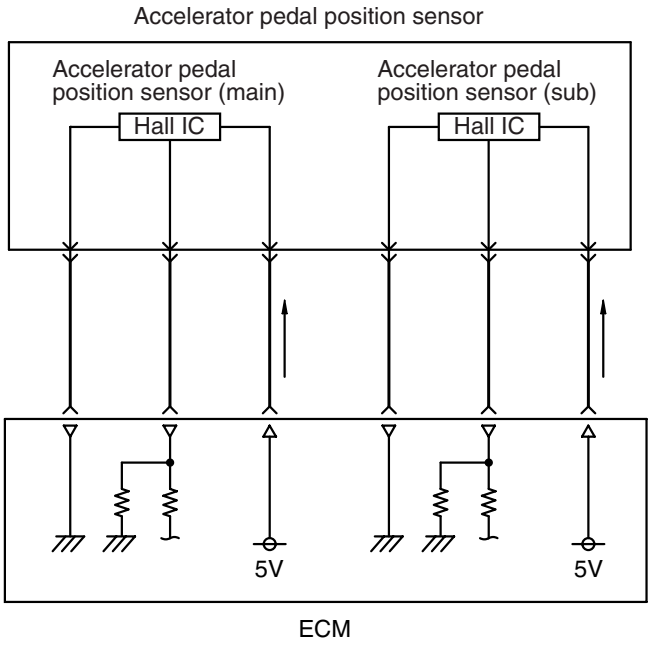

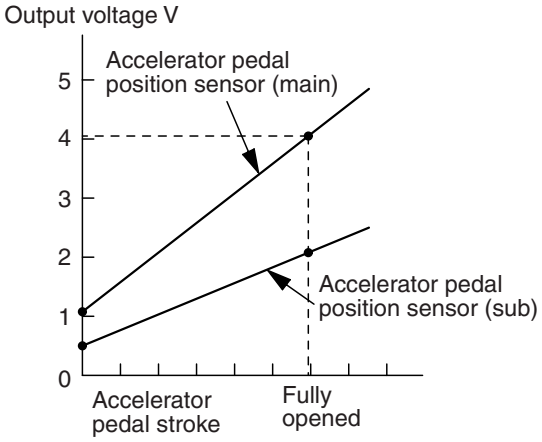

AK602211AE

HEATED OXYGEN SENSOR (except centor exhaust pipe heated oxygen sensor <California>)

Heated oxygen sensors are installed in 2 positions (front, rear) on the catalytic converter. Heated oxygen sensor has a built-in heater to help early activation of the sensor. This allows feed-back control of air-fuel ratio soon after engine start.

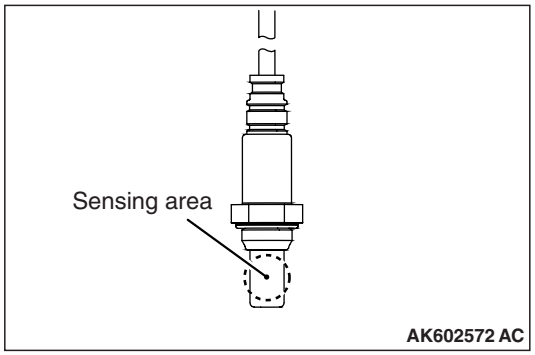

AK602572 AC

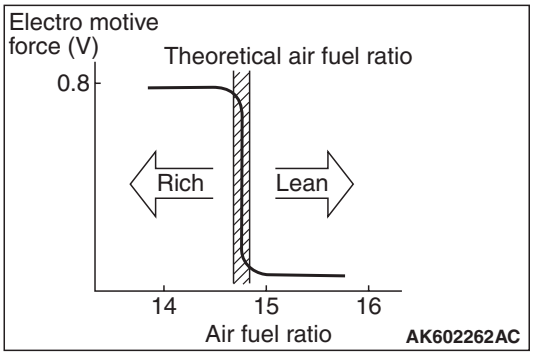

AK602262AC

This sensor uses the oxygen concentration cell principle of solid electrolyte (zirconia) and displays the property of sudden change in output voltage near theoretical air-fuel ratio. This property is used to detect oxygen density in exhaust gas. Feed-back to ECM allows it to judge whether air-fuel ratio is rich or lean compared to theoretical air-fuel ratio.

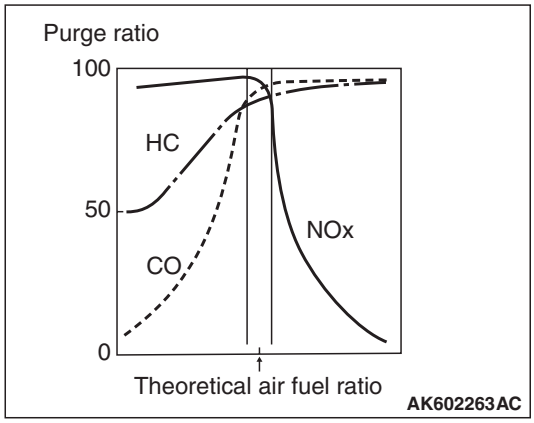

This allows ECM precise feedback control to get theoretical air-fuel ratio with best cleaning efficiency of 3-way catalytic converter.

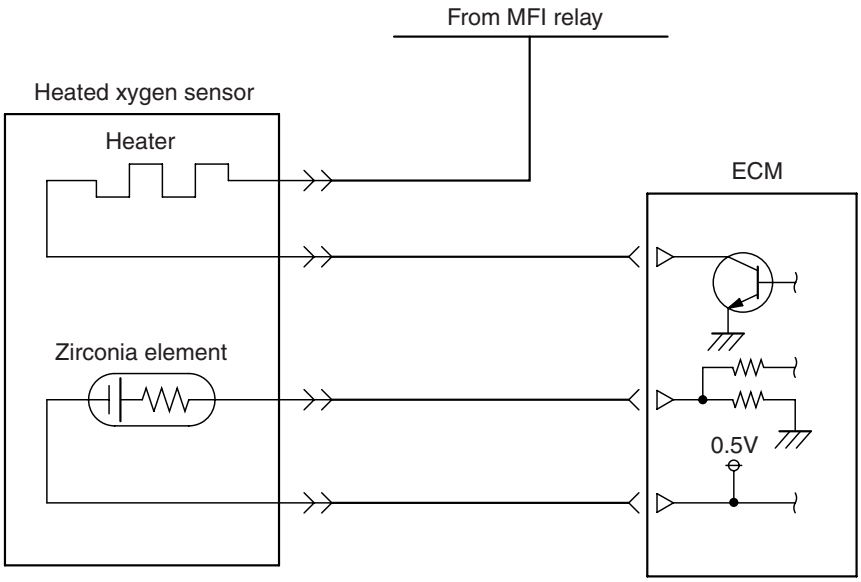

CRANKSHAFT POSITION SENSOR

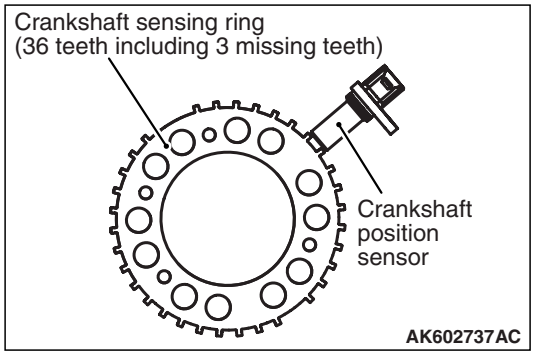

A crankshaft position sensor is installed on the right side of the cylinder block. The crankshaft position sensor monitors rotation of crankshaft sensing ring (36 teeth including 3 missing teeth) installed on the crankshaft and converts to voltage (pulse signal) that is output to ECM. ECM uses crankshaft position sensor's output pulse to detect crankshaft position.

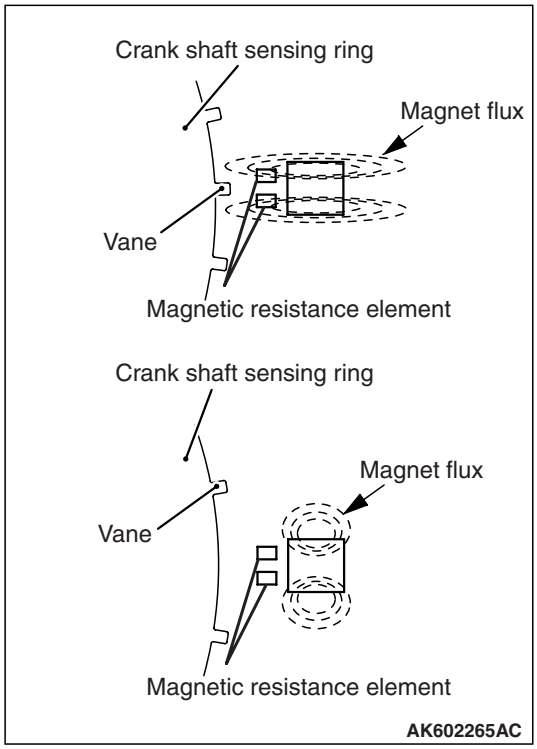

The crankshaft position sensor uses a magnetic resistance element. When the vane of the crankshaft-sensing blade passes the front surface of the magnetic resistance element, the flux from the magnet passes the magnetic resistance element. Thus, resistance of the magnetic resistance element increases. When the vane of the crankshaft-sensing blade does not pass the front surface of the magnetic resistance element, the flux from the magnet does not pass the magnetic resistance element and the resistance decreases. The crankshaft position sensor converts this change in resistance of the magnetic resistance element to a 5 V pulse signal and outputs it to ECM.

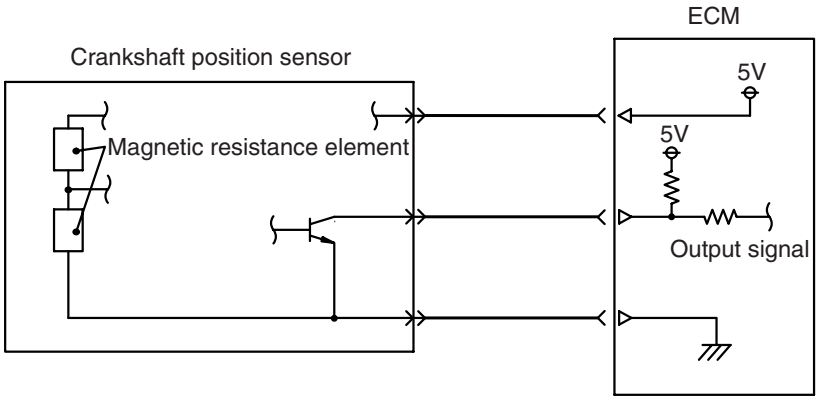

INTAKE CAMSHAFT POSITION SENSOR

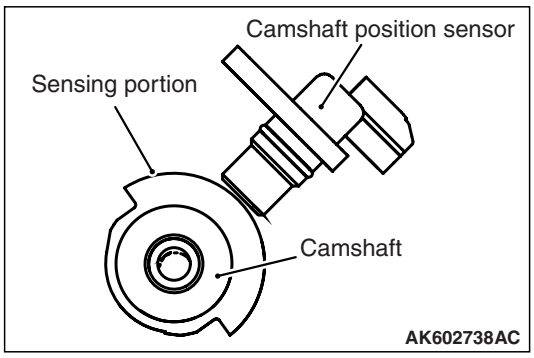

The intake camshaft position sensor is installed on the left side of the cylinder head. The intake camshaft position sensor monitors shape of the half-moon sensing portion and converts to voltage (pulse signal) that is output to ECM. Upon receiving this output voltage, the ECM effects feedback control to optimize the phase of the intake camshaft. Also, ECM uses a combination of the intake camshaft position sensor output pulse signal and crankshaft position sensor output pulse signal to identify cylinders in the compression process.

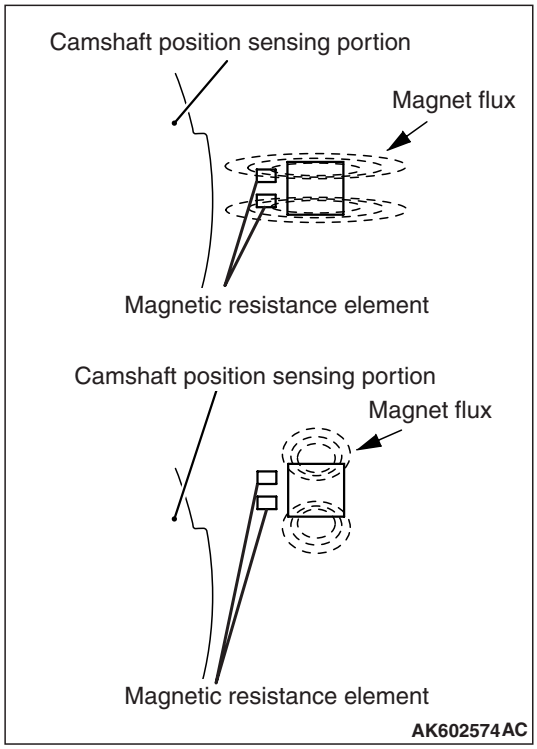

The intake camshaft position sensor uses a magnetic resistance element. When the camshaft position sensing portion passes the front surface of the magnetic resistance element, the flux from the magnet passes the magnetic resistance element. Thus, resistance of the magnetic resistance element increases. When the camshaft position sensing portion does not pass the front surface of the magnetic resistance element, the flux from the magnet does not pass the magnetic resistance element and the resistance decreases. The intake camshaft position sensor converts this change in resistance of the magnetic resistance element to a 5 V pulse signal and outputs it to ECM

EXHAUST CAMSHAFT POSITION SENSOR

The exhaust camshaft position sensor is installed on the right side of the cylinder head. The exhaust camshaft position sensor monitors shape of the half-moon sensing portion and converts to voltage (pulse signal) that is output to ECM. Upon receiving this output voltage, the ECM effects feedback control to optimize the phase of the exhaust camshaft. The structure and system of this sensor are basically the same as intake camshaft position sensor.

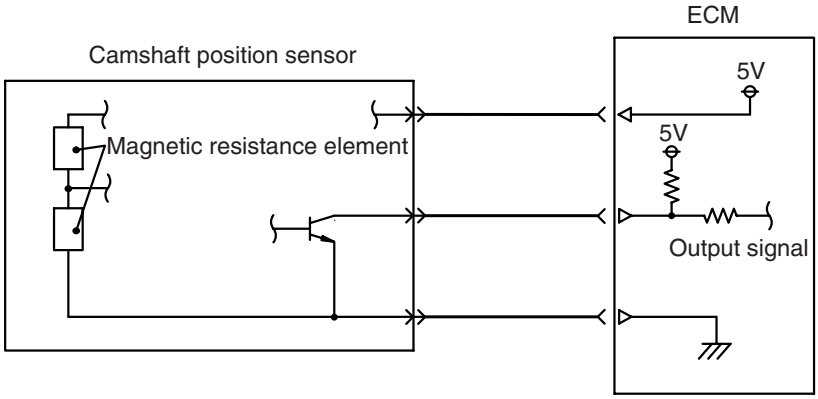

KNOCK SENSOR

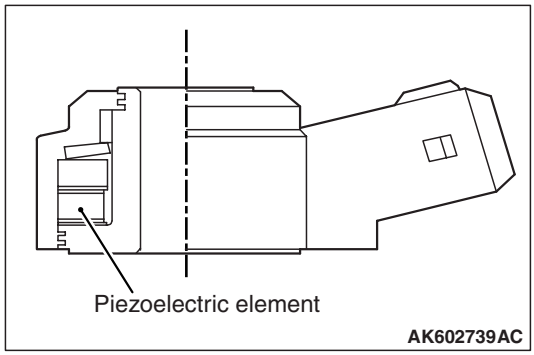

A knock sensor is installed on the left side of the cylinder block. Knock sensor uses the piezoelectric element to convert the vibration of the cylinder block generated when engine is in operation to minute voltage that is output to ECM. ECM uses the minute output voltage from the knock sensor filtered through the cylinder block's natural frequency to detect knocking, and compensates the ignition timing lag according to the strength of the knocking.

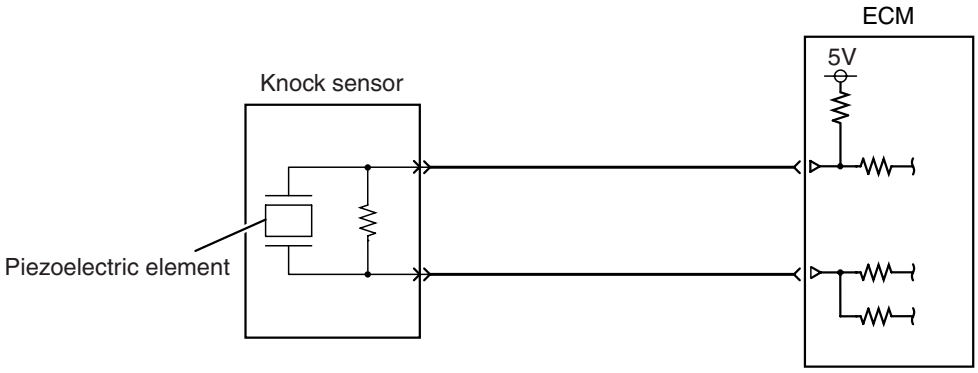

AK602226AD

BAROMETRIC PRESSURE SENSOR

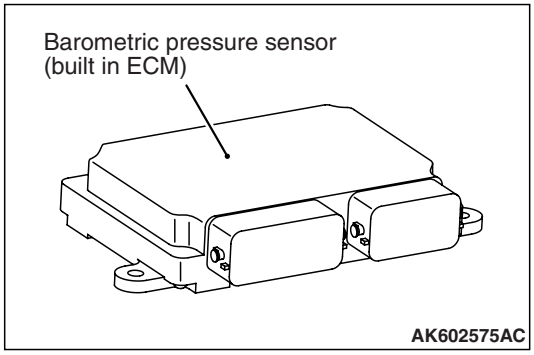

AK602575AC

A barometric pressure sensor is built into ECM. The barometric pressure sensor is a semiconductor diffused pressure element which outputs voltage to ECM according to atmospheric pressure. ECM uses this output voltage to sense the altitude of the vehicle and compensates fuel injection volume to achieve the appropriate air-fuel ratio for that altitude.

ENGINE OIL PRESSURE SWITCH

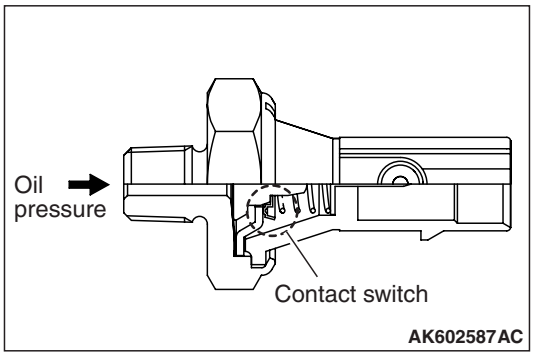

AK602587AC

The engine oil pressure switch is installed on the left side of the cylinder block. The engine oil pressure switch detects whether the oil pressure is high or low using the contact switch. When the oil pressure becomes higher than the specified value after the engine starts, the contact point of the engine oil pressure switch opens. This allows the ECM to detect the oil pressure is higher than the specified value. The ECM outputs the OFF signal to the combination meter through the CAN and then turns off the oil pressure warning lamp.

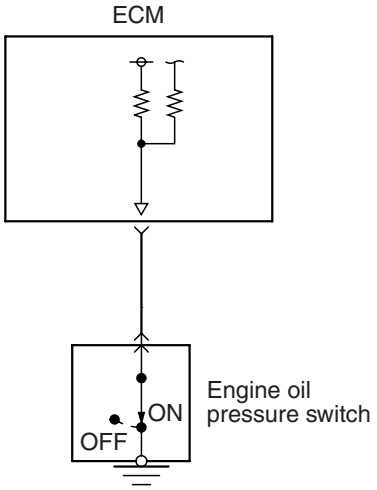

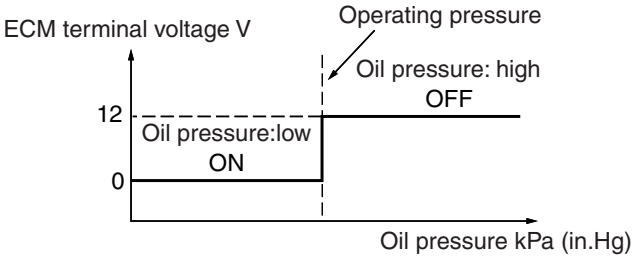

AK602228AD

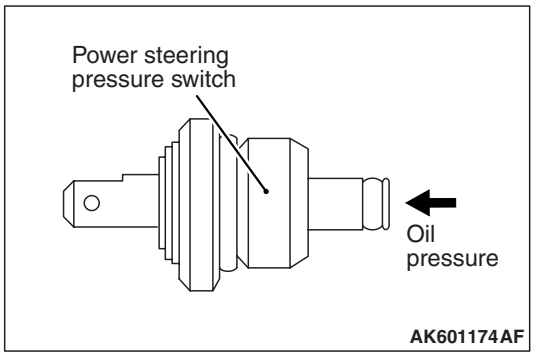

AK601174AF

POWER STEERING PRESSURE SWITCH

A power steering pressure switch is installed on the power steering oil pump. The power steering pressure switch uses a contact switch to detect the power steering oil pressure. When power steering oil pressure rises due to operation of the steering wheel, the power steering load switch outputs an ON signal to ECM. ECM performs idle-up according to the voltage and prevents reduction in engine speed due to power steering load and so maintains stable idle speed.

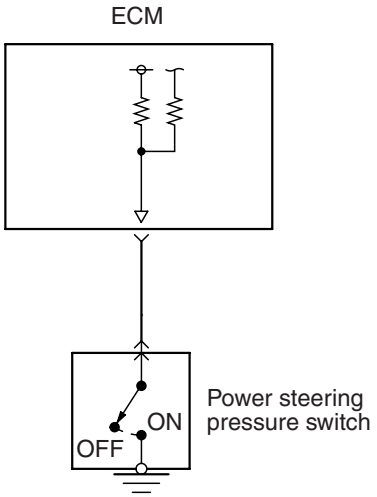

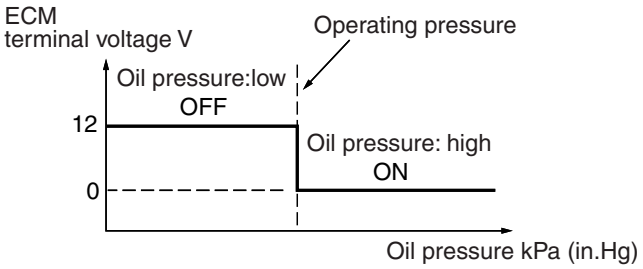

AK602213AE

FUEL TANK DIFFERENTIAL PRESSURE SENSOR

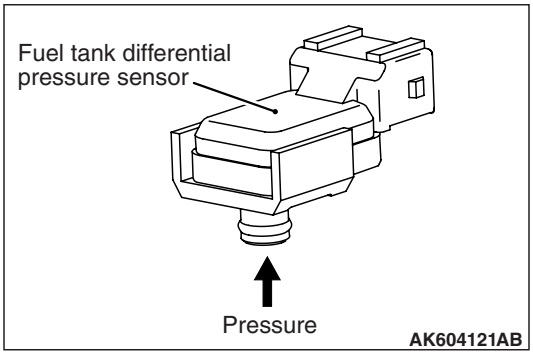

The fuel tank differential pressure sensor is installed to the fuel pump module. The fuel tank differential pressure sensor outputs the voltage to the ECM using the piezo resistive semiconductor in accordance with the difference between pressure in the fuel tank and the pressure of the atmosphere. When monitoring the evaporative leak, the ECM detects malfunctions of the evaporative emission control system by monitoring the amount of output voltage changes from this sensor. The sensor characteristics are as shown in the diagram.

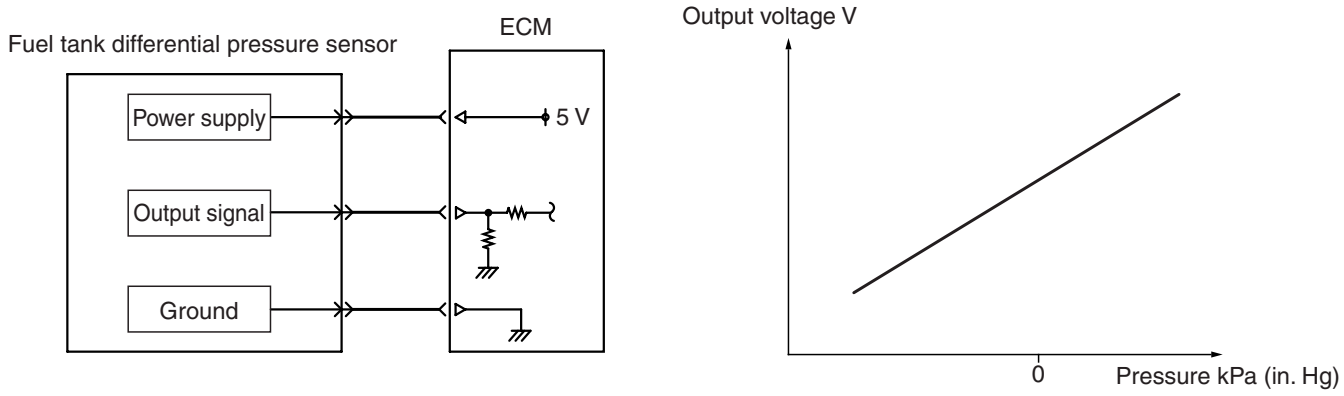

FUEL TANK TEMPERATURE SENSOR

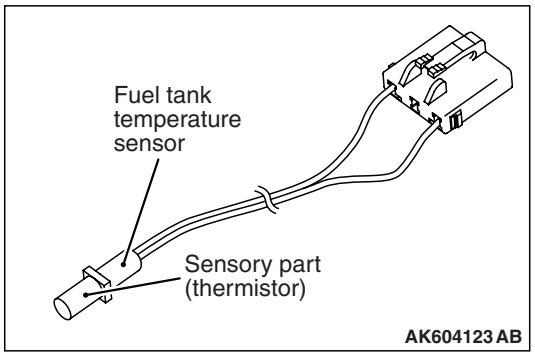

The fuel tank temperature sensor is installed to the fuel pump module. The fuel tank temperature sensor detects the temperature inside the fuel tank using the resistance change in the thermistor and outputs the voltage to the ECM in accordance with the temperature inside the fuel tank. The ECM monitors the evaporative leak in accordance with the fuel tank temperature. The sensor characteristics are as shown in the diagram.

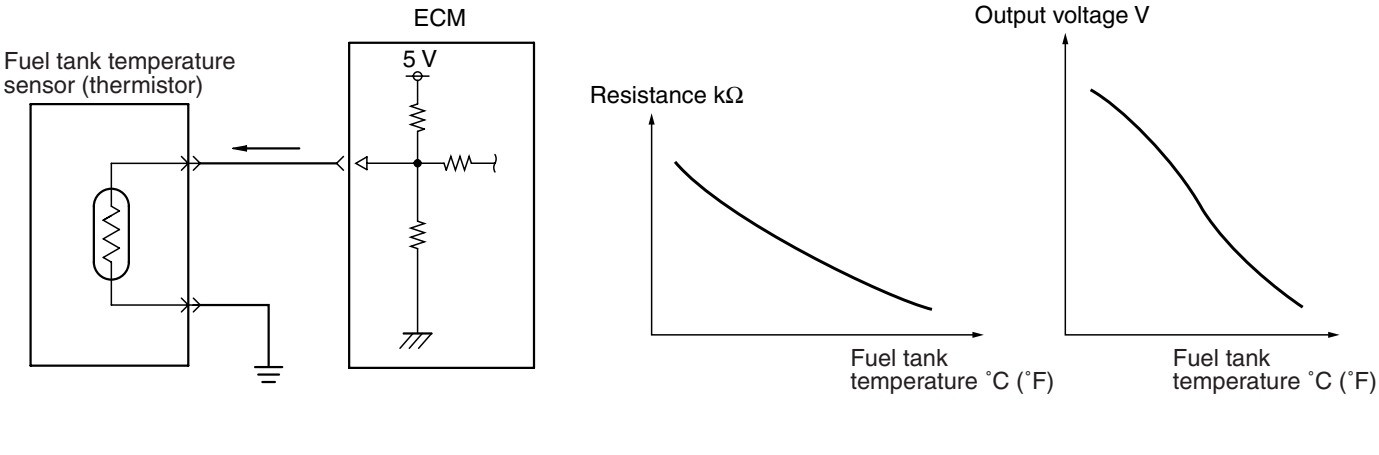

GENERATOR FR TERMINAL

Generator turns ON/OFF the power transistor in the voltage regulator to adjust current flow in the field coil according to alternator output current. In this way generator's output voltage is kept adjusted (to about 14.7 V). The ratio of power transistor ON time (ON duty) is output from generator FR terminal to ECM. ECM uses this signal to detect generator's output current and drives throttle actuator control motor according to output current (electric load). This prevents change in idle speed due to electric load and helps maintain stable idle speed.

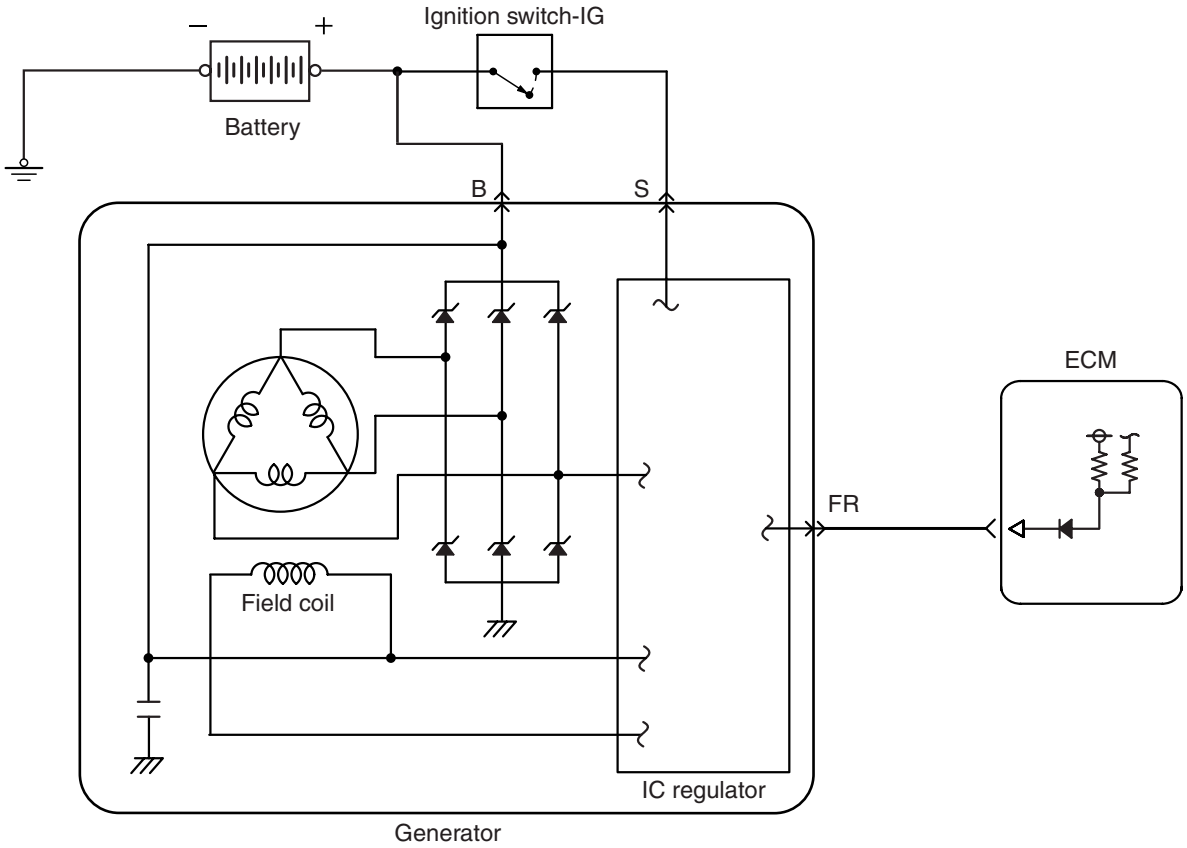

AK602229AD

GENERATOR L TERMINAL

After turning on the ignition switch, the current is input by the ECM to the generator L terminal. This allows the IC regulator to be on and the field coil to be excited. When the generator rotates in this situation, the voltage is excited in the stator coil and the current is output from B-terminal through the commutation diode. Also the generated voltage is input to the voltage regulator through the commutation diode. After the electric generation begins, the current is supplied to the field coil from this circuit. In addition, the generated voltage is output from the generator L terminal to the ECM. This allows the ECM to detect that the electric generation begins. The ECM outputs the ON signal to the combination meter through the CAN and then turns off the generator malfunction light.

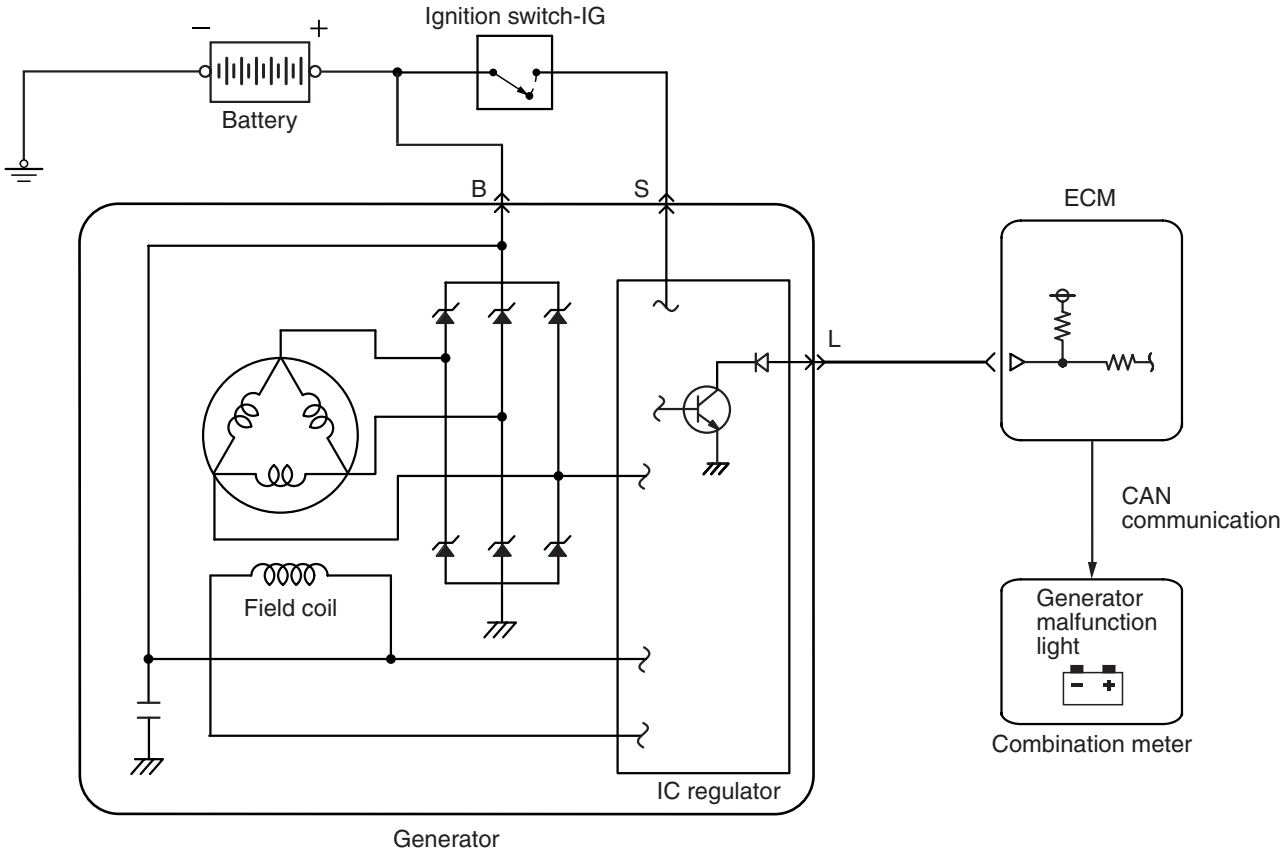

AK602577 AC

ACTUATOR

M2132002000353

INJECTOR

An injector is an injection nozzle with the electromagnetic valve that injects fuel based on the injection signal sent by ECM. 1 injector is installed in the intake manifold of each cylinder and fixed to the fuel rail. When electricity flows through the solenoid coil, the plunger gets sucked in. The ball valve is integrated with the plunger, and gets pulled together with the plunger till the fully open position so that the injection hole is fully open and the fuel gets injected.

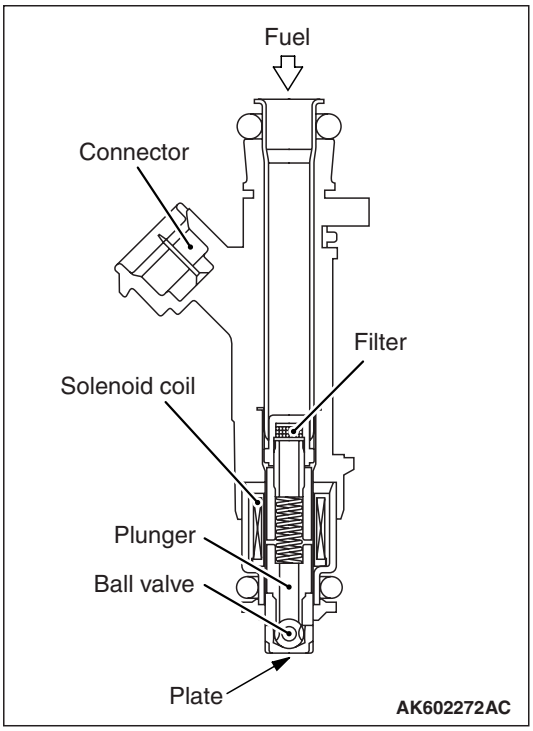

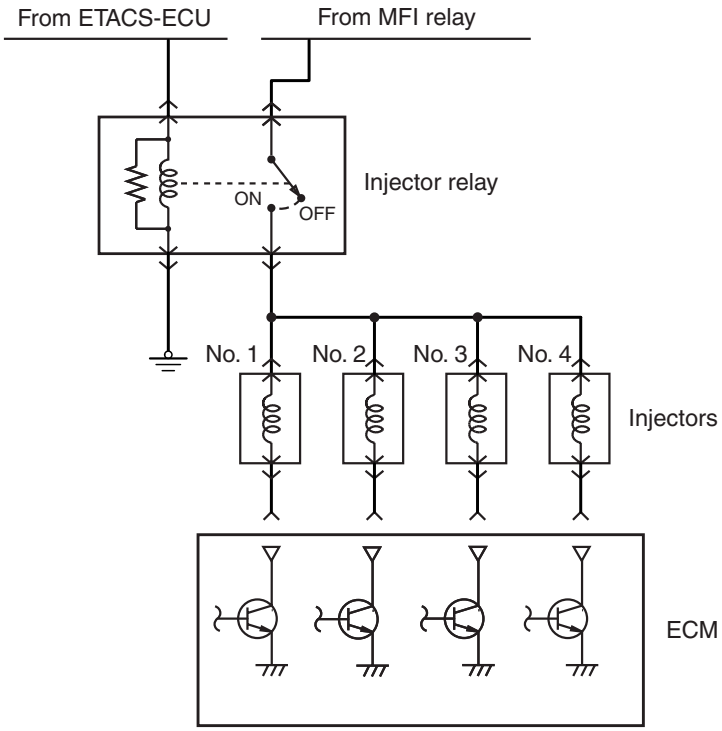

AK602578 AC

Voltage from the battery gets applied from the injector relay to the injector and up to the ECM. ECM turns ON its power transistor and prepares the injector's ground circuit. Thus, current flows through the injector while power transistor is ON and the injector injects fuel.

THROTTLE ACTUATOR CONTROL MOTOR

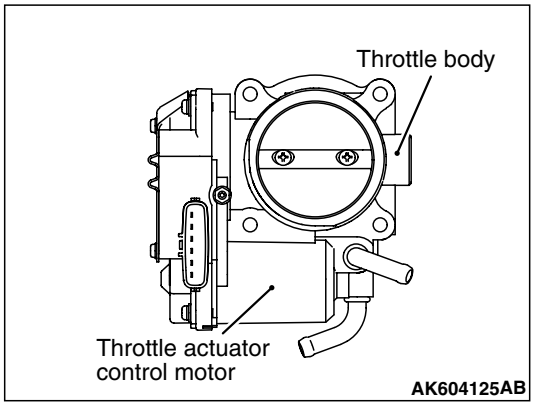

A throttle actuator control motor is installed in throttle body. The throttle actuator control motor performs the Open/Close of the throttle valve through the reduction gear. ECM changes current direction according to the Open/Close direction and also changes current to the motor coil to control the throttle actuator control motor.

Throttle actuator control motor is composed of a good response, low energy, and small DC motor with brush and can generate rotation force corresponding to the current applied on the coil. When there is no current passing through the throttle actuator control motor, the throttle valve remains at a prescribed opening angle. So, even if current stops because of a fault in the system, a minimum level of running remains possible.

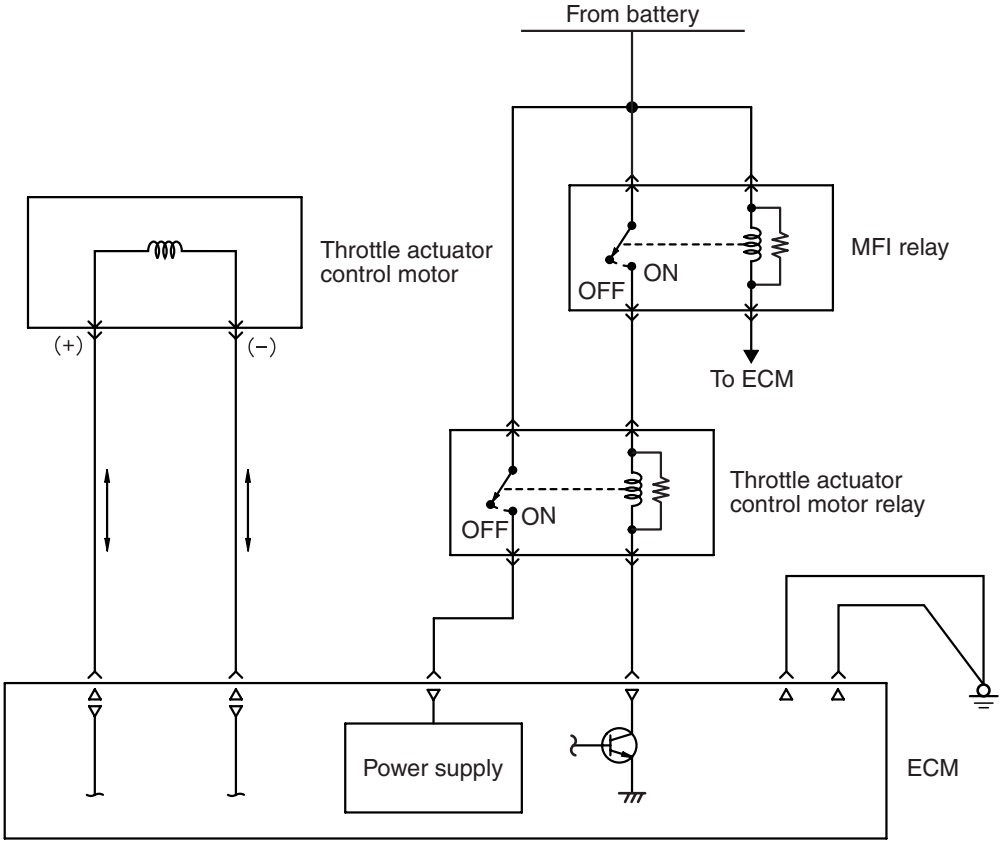

IGNITION COIL

Refer to GROUP 16 –Ignition Coil P.16-2.

EXHAUST GAS RECIRCULATION (EGR) VALVE

Refer to GROUP 17 –Emission Control –Exhaust Gas Recirculation (EGR) System P.17-12.

EVAPORATIVE EMISSION PURGE SOLENOID

Refer to GROUP 17 –Emission Control –Evaporative Emission Control System P.17-11.

INTAKE ENGINE OIL CONTROL VALVE

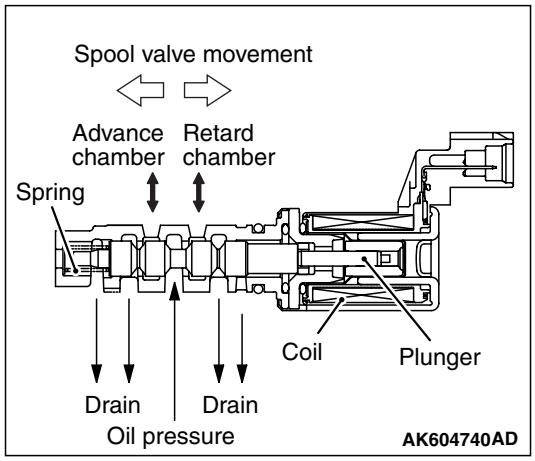

The intake engine oil control valve is installed on the left side of the cylinder head. Receiving the duty signal from the ECM, the intake engine oil control valve moves the spool valve position and divides the oil pressure from the cylinder block into the advanced chamber and the retarded chamber of the V.V.T. sprocket as well as continually changes the intake camshaft phase. The spring makes spool valve stop at the position where the intake camshaft is at the most retarded angle when the engine is stopped. The ECM moves the spool valve position by increasing and decreasing ON duty ratio of the intake engine oil control valve and allows the intake camshaft to be at the target phase angle. When the duty ratio increases, the spool valve moves. The sprocket rotates toward the advanced angle side. When the duty ratio decreases, the sprocket rotates toward the retarded angle side. When the medium duty ratio, at which the spool valve is at the medium position, is achieved, all the oil passages are closed. This allows the phase angle to be kept constant. The ECM changes and controls the duty ratio in accordance with the engine operation to get the optimum phase angle.

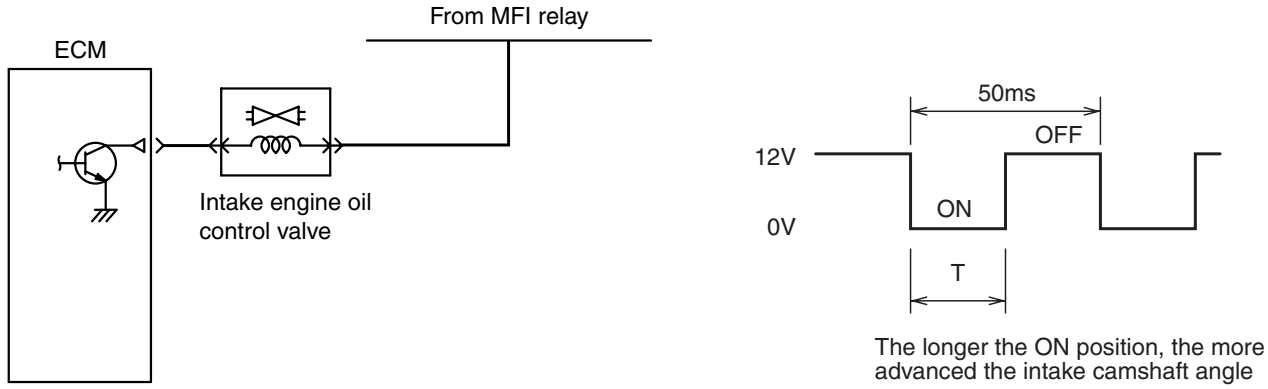

EXHAUST ENGINE OIL CONTROL VALVE

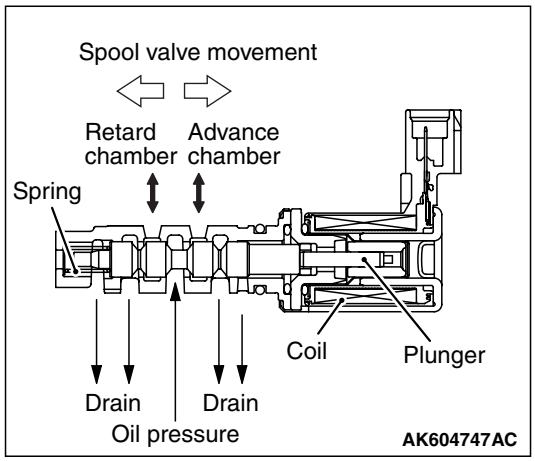

The exhaust engine oil control valve is installed on the right side of the cylinder head. Receiving the duty signal from the ECM, the exhaust engine oil control valve moves the spool valve position and divides the oil pressure from the cylinder block into the advanced chamber and the retarded chamber of the V.V.T. sprocket as well as continually changes the exhaust camshaft phase. The spring makes spool valve stop at the position where the exhaust camshaft is at the most advanced angle when the engine is stopped. The ECM moves the spool valve position by increasing and decreasing ON duty ratio of the exhaust engine oil control valve and allows the exhaust camshaft to be at the target phase angle. When the duty ratio increases, the spool valve moves. The sprocket rotates toward the retarded angle side. When the duty ratio decreases, the sprocket rotates toward the advanced angle side. When the medium duty ratio, at which the spool valve is at the medium position, is achieved, all the oil passages are closed. This allows the phase angle to be kept constant. The ECM changes and controls the duty ratio in accordance with the engine operation to get the optimum phase angle.

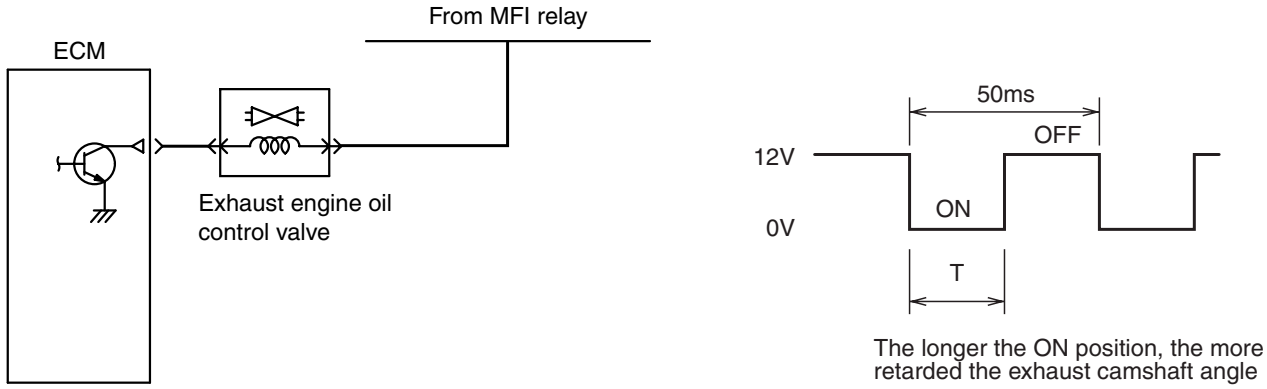

AK602579 AG

EVAPORATIVE EMISSION VENTILATION SOLENOID

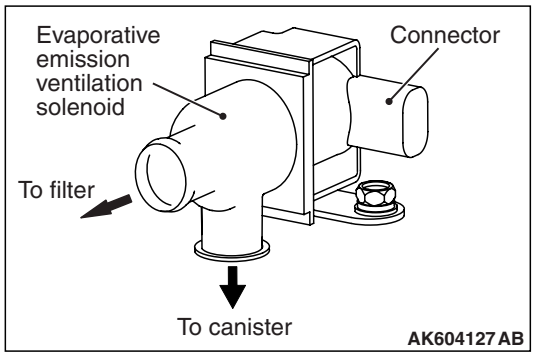

The evaporative emission ventilation solenoid, an ON/OFF type solenoid valve, is integrated in the evaporative canister.The evaporative emission ventilation solenoid is installed between the evaporative canister and the air-releasing end, where the evaporative emission ventilation solenoid takes or shuts off air.When the current is not flowing through the coil, the air flows between the nipples, "A" and "B", and through the evaporative canister.When the current is flowing through the coil, the air is sealed in the nipple "A" and the air through the evaporative canister is shut off.When monitoring the evaporative leak, the ECM turns the evaporative emission ventilation solenoid on to create the slight vacuum condition in the evaporative emission control system. The ECM shuts off the air flowing through the evaporative canister to maintain the vacuum condition necessary for monitoring.

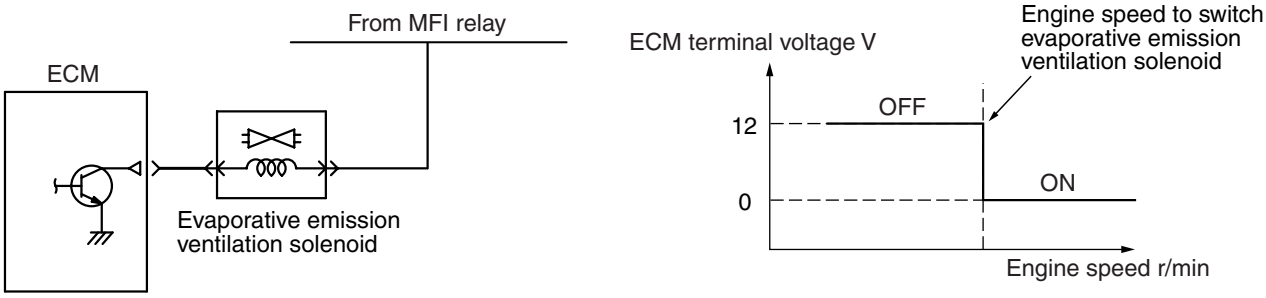

AK604554 AB

GENERATOR G TERMINAL

ECM uses ON/OFF of generator G terminal to control generator output voltage. When the power transistor in the ECM turns ON, output voltage gets adjusted to about 12.8 V. When generator output voltage drops to 12.8 V it becomes lower than voltage of the charged battery and almost no current is output from the generator. When the power transistor in the ECM turns OFF, output voltage gets adjusted to about 14.7 V. When generator output voltage is about 14.7 V, generator outputs current to produce electricity. In case electric load is generated suddenly, ECM controls generator G terminal's On-duty to limit the sudden increase in generator load due to generation and thus prevents change in idle speed.

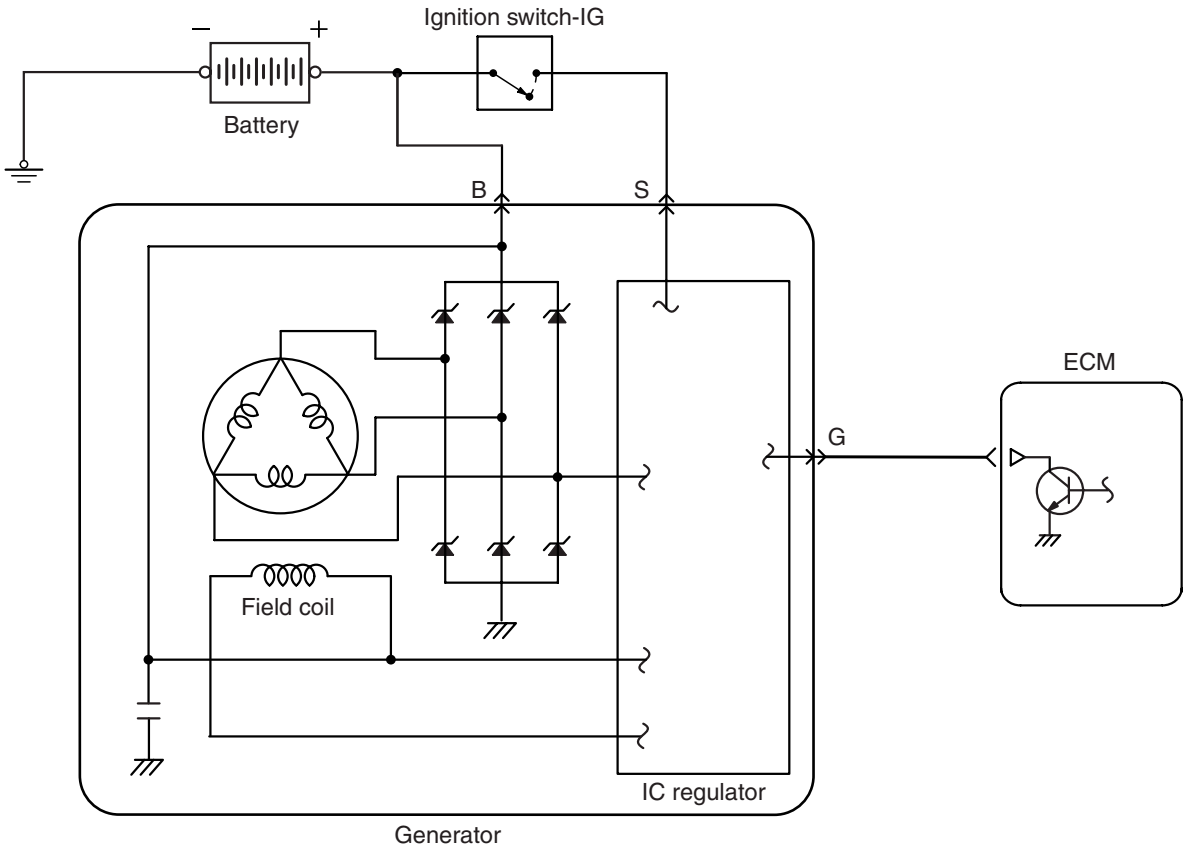

AK602233AD

FUEL INJECTION CONTROL

M2132003001036

Fuel injection volume is regulated to obtain the optimum air-fuel ratio in accordance with the constant minute changes in engine driving conditions. Fuel injection volume is controlled by injector drive time (injection time). There is a prescribed basic drive time that varies according to the engine speed and intake air volume. ECM adds prescribed compensations to this basic drive time according to conditions such as the intake air temperature and engine coolant temperature to decide injection time. Fuel injection is done separately for each cylinder and is done once in two engine rotations.

System Configuration Diagram

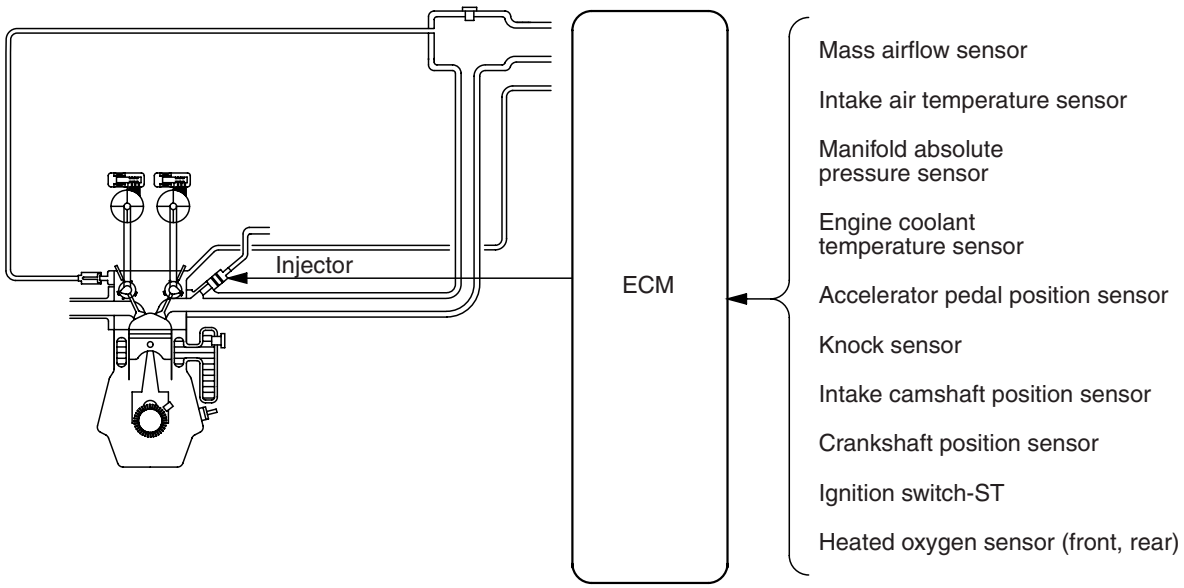

AK604128AB

1. INJECTOR ACTUATION (FUEL INJECTION) TIMING

Injector drive time in case of multiport fuel injection (MFI) is controlled as follows according to driving conditions.

Fuel Injection During Cranking and Normal Operation

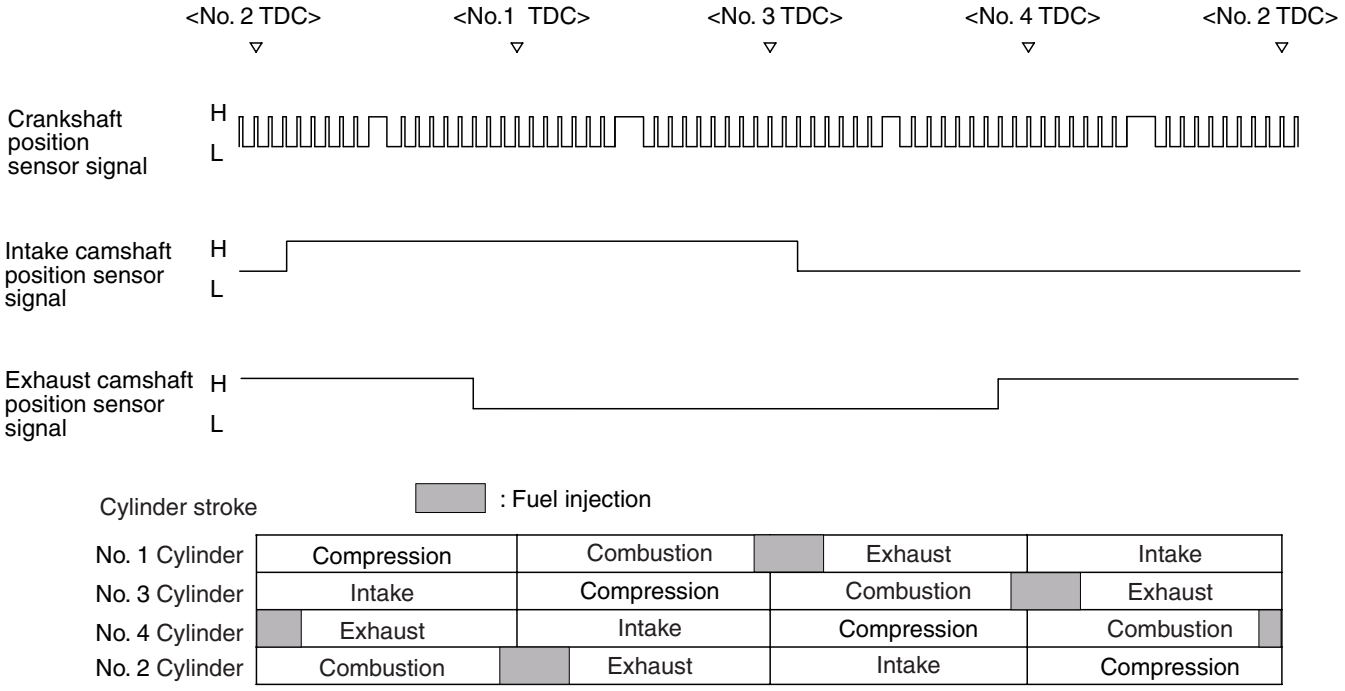

AK604622AB

Fuel injection to each cylinder is done by driving the injector at optimum timing while it is in exhaust process based on the crankshaft position sensor signal. ECM compares the crankshaft position sensor output pulse signal and intake camshaft position sensor output pulse signal to identify the cylinder. Using this as a base, it performs sequential injection in the sequence of cylinders 1, 3, 4, 2.

Additional Fuel Injection During Acceleration

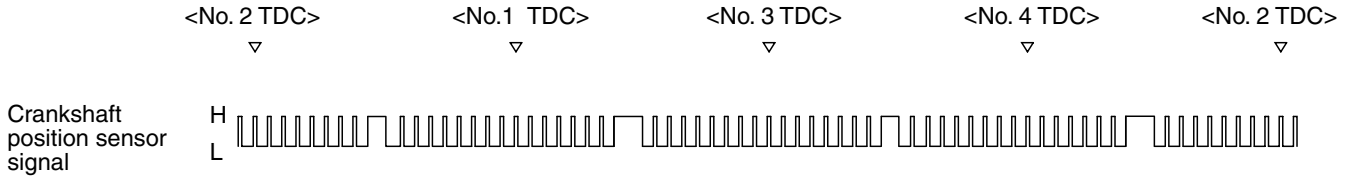

Increase injection for acceleration

Cylinder stroke					
No. 1 Cylinder	Compression	Combustion		Exhaust	Intake
No. 3 Cylinder	Intake	Compression		Combustion	Exhaust
No. 4 Cylinder	Exhaust	Intake		Compression	Combustion
No. 2 Cylinder	Combustion	Exhaust		Intake	Compression

AK604623AB

In addition to the synchronizing fuel injection with crankshaft position sensor signal during acceleration, the volume of fuel is injected according to the extent of the acceleration.

2. Fuel injection volume (injector drive time) control

The figure shows the flow for injector drive time calculation. Basic drive time is decided based on the mass airflow sensor signal (intake air volume signal) and crankshaft position sensor signal (engine rotation signal). This basic drive time is compensated according to signals from various sensors and optimum injector drive time (fuel injection volume) is calculated according to driving conditions.

Fuel Injection Volume Control Block Diagram

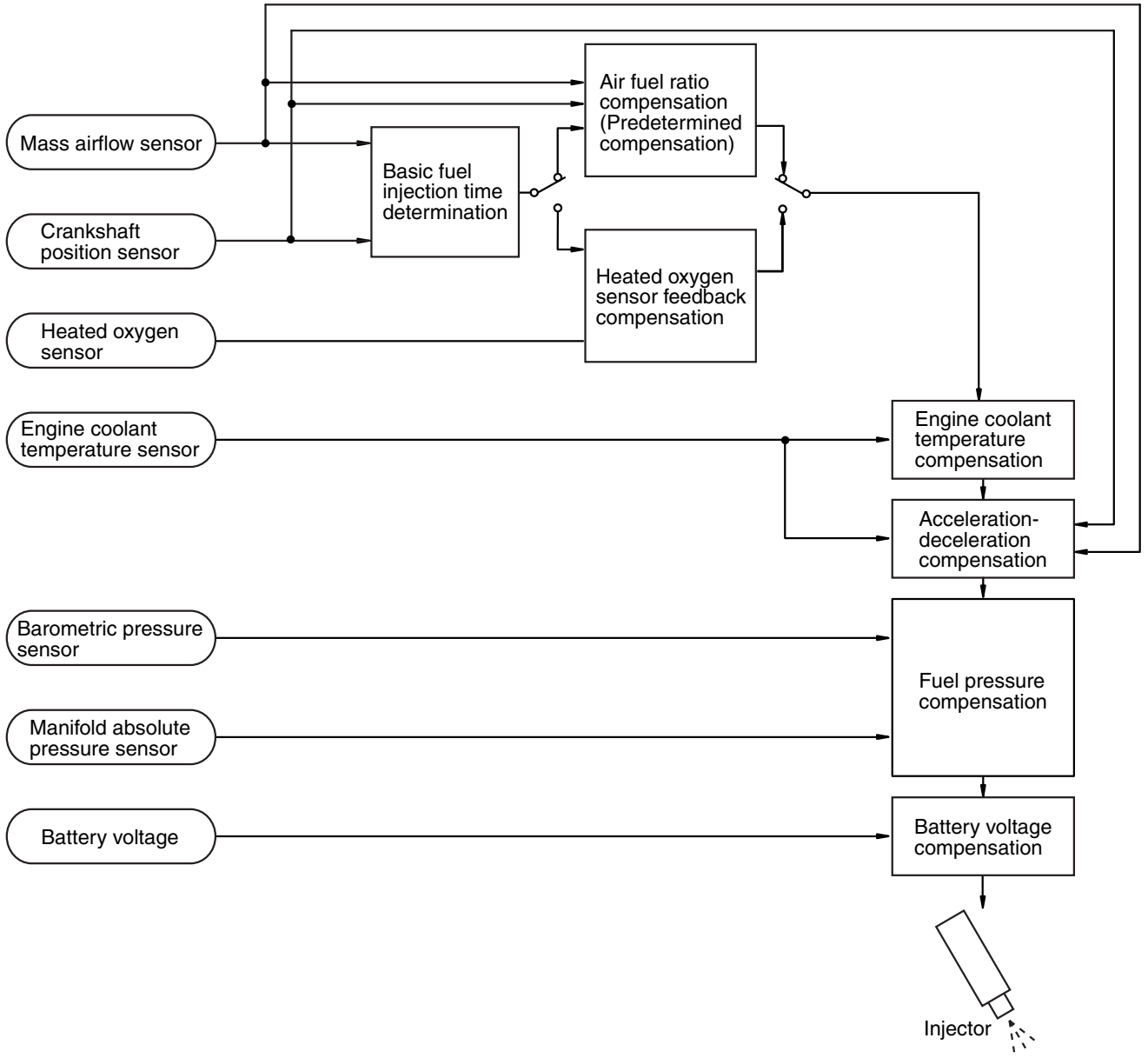

AK602278AD

[Injector basic drive time]

Fuel injection is performed once per cycle for each cylinder. Basic drive time refers to fuel injection volume (injector drive time) to achieve theoretical air-fuel ratio for the intake air volume of 1 cycle of 1 cylinder. Fuel injection volume changes according to the pressure difference (injected fuel pressure) between manifold absolute pressure and fuel pressure (constant). So, injected fuel pressure compensation is made to injector drive time for theoretical air-fuel ratio to arrive at basic drive time.

$$\text{Basic fuel injection time} \propto \frac{\text{Intake air amount per cycle per cylinder}}{\text{Theoretical air-fuel ratio}} \times \text{Fuel injection pressure compensation}$$

AK602279AC

Intake air volume of each cycle of 1 cylinder is calculated by ECM based on the mass airflow sensor signal and crankshaft position sensor signal. Also, during engine start, the map value prescribed by the engine coolant temperature sensor signal is used as basic drive time.

[Injector drive time compensation]

After calculating the injector basic drive time, the ECM makes the following compensations to control the optimum fuel injection volume according to driving conditions.

List of main compensations for fuel injection control

Compensations	Content
Heated oxygen sensor feedback compensation	The heated oxygen sensor signal is used for making the compensation to get air-fuel ratio with best cleaning efficiency of the 3-way catalytic converter. This compensation might not be made sometimes in order to improve drivability, depending on driving conditions. (Air-fuel ratio compensation is made.)
Air-fuel ratio compensation	Under driving conditions where heated oxygen sensor feedback compensation is not performed, compensation is made based on pre-set map values that vary according to engine speed and intake air volume.
Engine coolant temperature compensation	Compensation is made according to the engine coolant temperature. The lower the engine coolant temperature, the greater the fuel injection volume.
Acceleration/ Deceleration compensation	Compensation is made according to change in intake air volume. During acceleration, fuel injection volume is increased. Also, during deceleration, fuel injection volume is decreased.
Fuel injection compensation	Compensation is made according to the pressure difference between atmospheric pressure and manifold absolute pressure. The greater the difference in pressure, the shorter the injector drive time.
Battery voltage compensation	Compensation is made depending on battery voltage. The lower the battery voltage, the greater the injector drive signal time.
Learning value for fuel compensation	Compensation amount is learned to compensate feedback of heated oxygen sensor. This allows system to compensate in accordance with engine characteristics.

[Fuel limit control during deceleration]

ECM limits fuel when decelerating downhill to prevent excessive rise of catalytic converter temperature and to improve fuel efficiency.

[Fuel-cut control when over-run]

When engine speed exceeds a prescribed limit (6,600 r/min), ECM cuts fuel supply to prevent overrunning and thus protect the engine. Also, if engine speed exceeds 4,000 r/min for 15 seconds while vehicle is stationary (no load), it cuts fuel supply and controls the throttle valve opening angle to protect the engine.

IGNITION TIMING AND CONTROL FOR CURRENT CARRYING TIME

M2132027100089

Ignition timing is pre-set according to engine driving conditions. Compensations are made according to pre-set values depending on conditions such as engine coolant temperature, battery voltage etc. to decide optimum ignition timing. Primary current connect/disconnect signal is sent to the power transistor to control ignition timing. Ignition is done in sequence of cylinders 1, 3, 4, 2.

System Configuration Diagram

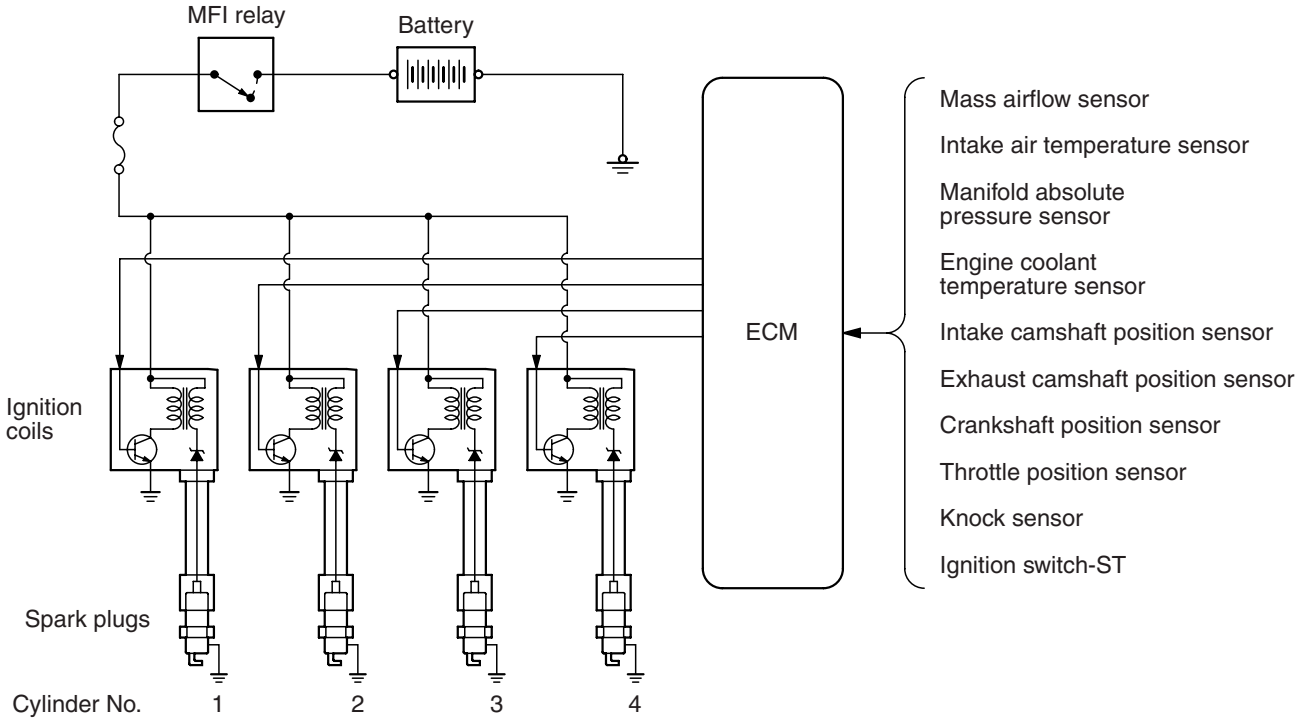

AK502722AD

1. Ignition distribution control

Based on the crankshaft position sensor signal and camshaft position sensor signal, ECM decides the ignition cylinder, calculates the ignition timing and sends the ignition coil primary current connect/disconnect signal to the power transistor of each cylinder in the ignition sequence.

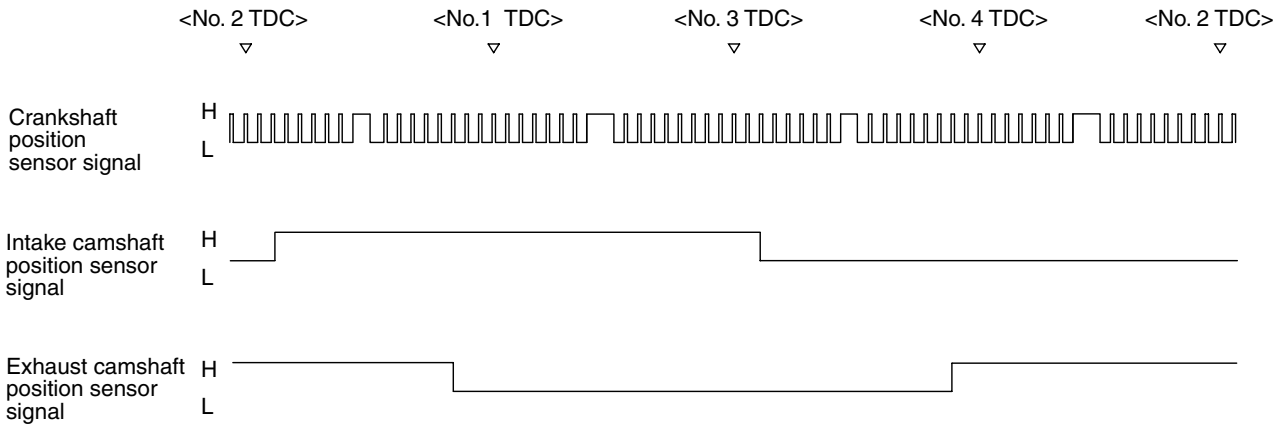

Cylinder stroke				
No. 1 Cylinder	Compression (Ignition)	Combustion	Exhaust	Intake
No. 3 Cylinder	Intake	Compression	Combustion	Exhaust
No. 4 Cylinder	Exhaust	Intake	Compression	Combustion
No. 2 Cylinder	Combustion	Exhaust	Intake	Compression

AK604624AB

2. Spark-advance control and current carrying time control

[During start]

ECM initiates ignition at fixed ignition timing (5° BTDC) synchronized with the crankshaft position sensor signal.

[During normal operation]

After determining the basic spark-advance based on the intake air volume and engine speed, ECM makes compensations based on input from various sensors to control the optimum spark-advance and current carrying time.

List of main compensations for spark-advance control and current carrying time control

Compensations	Content
Intake air temperature compensation	Compensation is made according to intake air temperature. The higher the intake air temperature the greater the delay in ignition timing.
Engine coolant temperature compensation	Compensation is made according to engine coolant temperature. The lower the engine coolant temperature the greater the advance in ignition timing.
Knocking compensation	Compensation is made according to generation of knocking. The greater the knocking the greater the delay in ignition timing.
Stable idle compensation	Compensation is made according to change in idle speed. In case engine speed becomes lower than target speed, ignition timing is advanced.
Delay compensation when changing shift	During change of shift, sparking is delayed compared to normal ignition timing to reduce engine output torque and absorb the shock of the shift change.
Battery voltage compensation	Compensation is made depending on battery voltage. The lower the battery voltage the greater the current carrying time and when battery voltage is high current carrying time is shortened.

[Control for checking ignition timing]

During basic ignition timing set mode for M.U.T.-III actuator test function, sparking is done with fixed ignition timing (5° BTDC) synchronized with crankshaft position sensor signal.

THROTTLE VALVE OPENING ANGLE CONTROL AND IDLE SPEED CONTROL

M2132003500328

ECM detects the amount of accelerator pedal depression (as per operator's intention) through the accelerator pedal position sensor. Based on pre-set basic target opening angles it adds various compensations and controls the throttle valve opening angle according to the target opening angle.

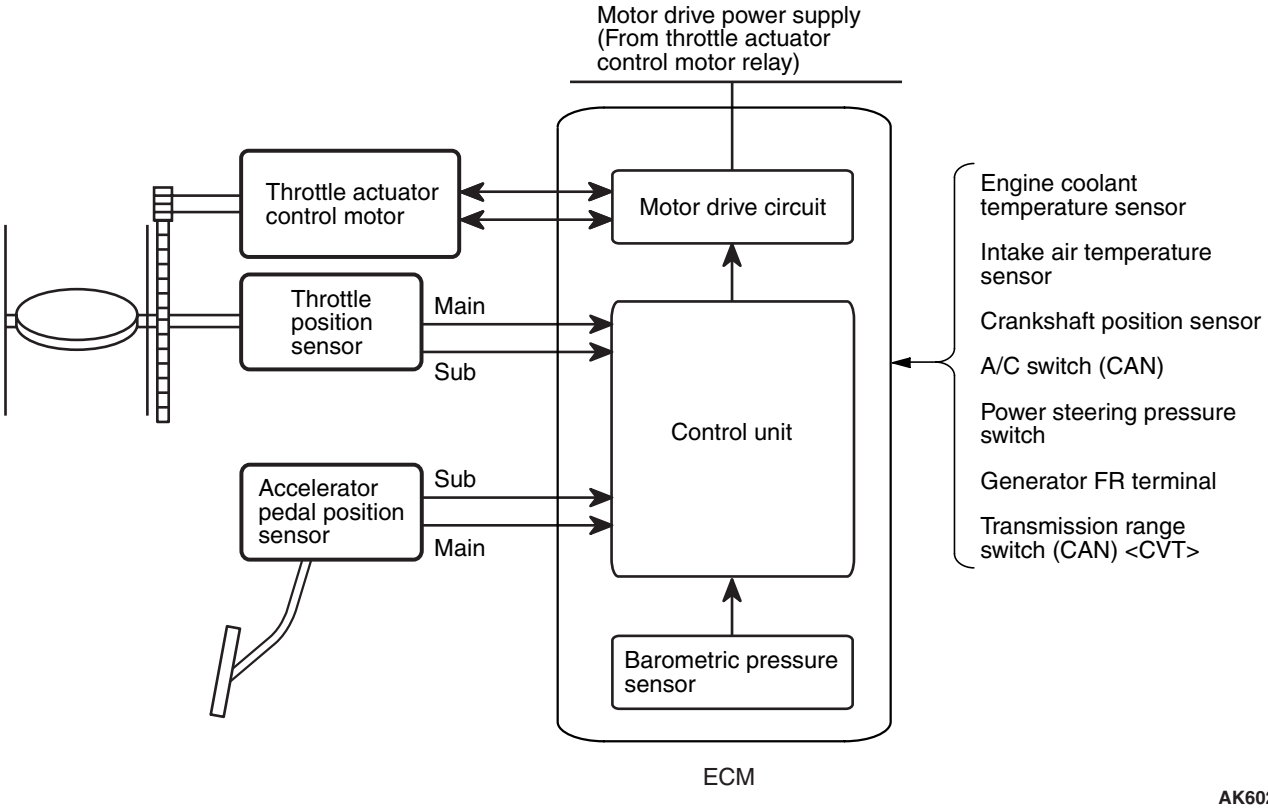

While starting

ECM adds various compensations to the target opening angle that are set based on the engine coolant temperature, so that the air volume is optimum for starting.

While idling

ECM controls the throttle valve to achieve the target opening angle that are set based on the engine coolant temperature. In this way best idle operation is achieved when engine is cold and when it is hot. Also, the following compensations ensure optimum control.

While driving

Compensations are made to the target opening angle set according to the accelerator pedal opening angle and engine speed to control the throttle valve opening angle.

List of main compensations for throttle valve opening angle and idle speed control

Compensations	Content
Stable idle compensation (immediately after start)	In order to stabilize idle speed immediately after start, target opening angle is kept big and then gradually reduced. Compensation values are set based on the engine coolant temperature.
Rotation speed feedback compensation (while idling)	In case there is a difference between the target idle speed and actual engine speed, ECM compensates the throttle valve opening angle based on that difference.
Atmospheric pressure compensation	At high altitudes atmospheric pressure is less and the intake air density is low. So, the target opening angle is compensated based on atmospheric pressure.
Engine coolant temperature compensation	Compensation is made according to the engine coolant temperature. The lower the engine coolant temperature the greater the throttle valve opening angle.
Electric load compensation	Throttle valve opening angle is compensated according to electric load. The greater the electric load, the greater the throttle valve opening angle.
Compensation when shift is in D range <CVT>	When transmission is changed from P or N range to some other range, throttle valve opening angle is increased to prevent reduction in engine speed.
Compensation when A/C is functioning	Throttle valve opening angle is compensated according to functioning of A/C compressor. While A/C compressor is being driven, the throttle valve opening angle is increased.
Power steering fluid pressure compensation	Throttle valve opening angle is compensated according to power steering functioning. When power steering oil pressure rises and power steering pressure switch is ON, the throttle valve opening angle is increased.

Initialize control

After ignition switch turns OFF, ECM drives the throttle valve from fully closed position to fully open position and records the fully closed/open studied value of the throttle position sensor (main and sub) output signals. The recorded studied values are used as studied value compensation for compensating basic target opening angle when the engine is started next.

MIVEC (Mitsubishi Innovative Valve Timing Electronic Control System)

M2132023500212

MIVEC is the system which continuously varies and controls the opening and closing timings of the intake valve and the exhaust valve.

System Configuration Diagram

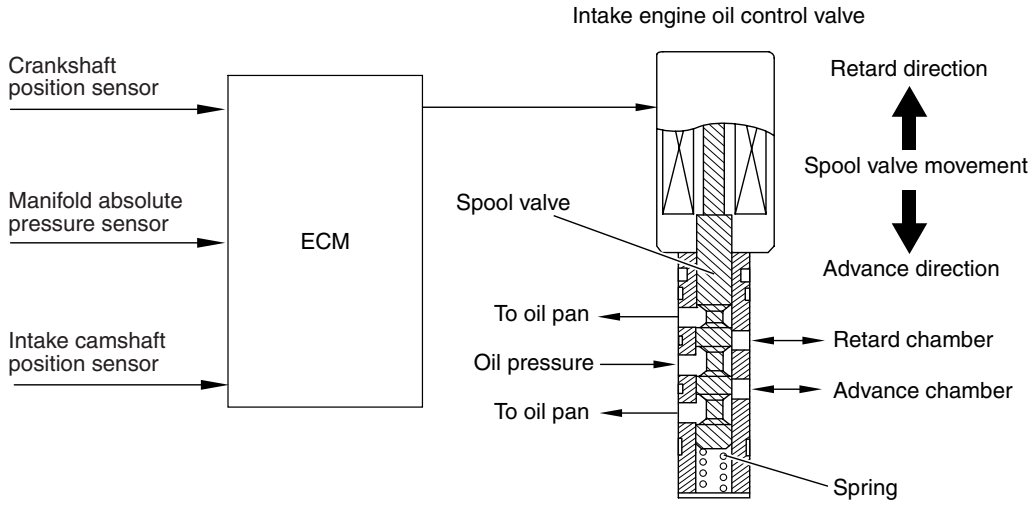

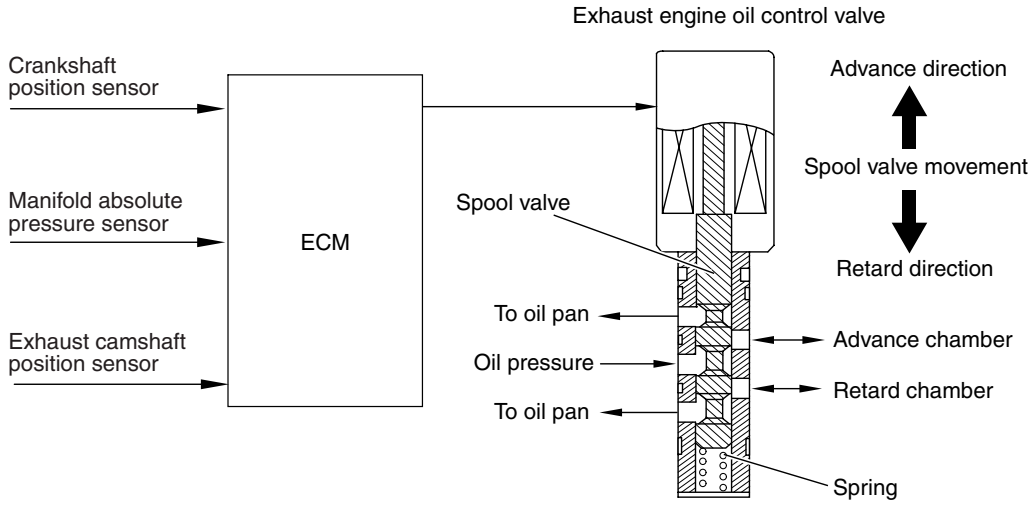

AK604826 AB

MIVEC allows the optimum valve timing to be controlled in accordance with the engine operation and the idling stability to be improved, as well as the output and the torque to be better in all the operation ranges.

- The ECM assesses the engine operation through the signals from each sensor.
- Based on the assessed information, the ECM sends the duty signal to the intake engine oil control valve and exhaust engine oil control valve as well as controls the spool valve position.
- Changing the spool valve position allows the oil pressure to be divided into the retarded chamber and the advanced chamber, as well as allows the phases of the intake camshaft and the exhaust camshaft to be continuously changed.

Phase Angle Detection

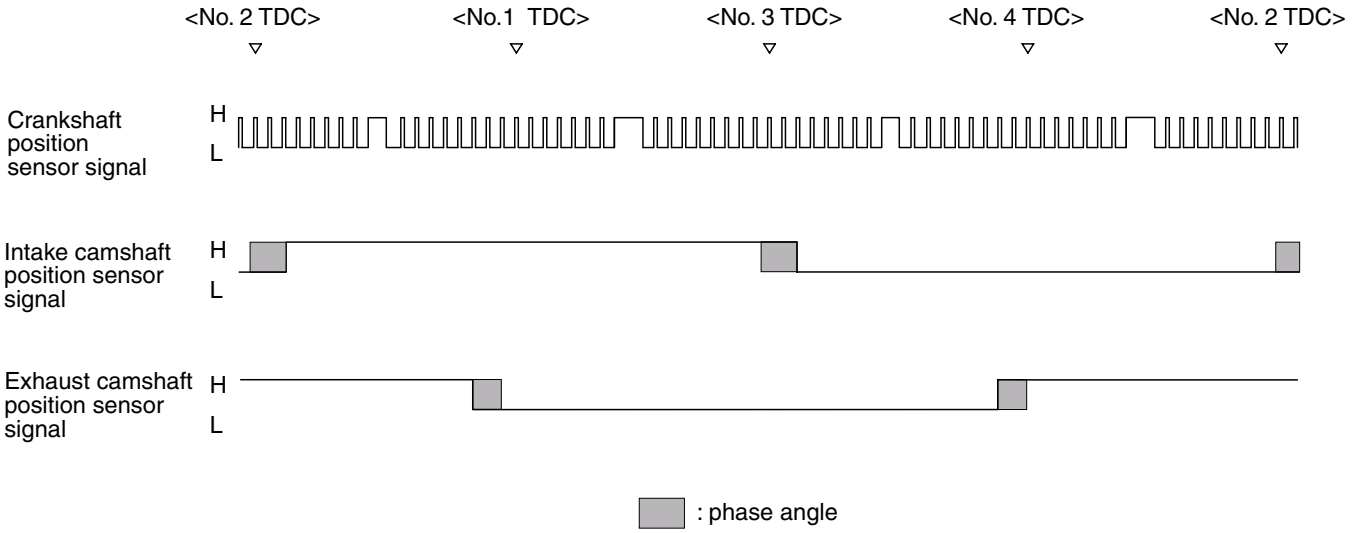

AK604625AB

The detected phase angle is calculated using the cam position sensor signal.

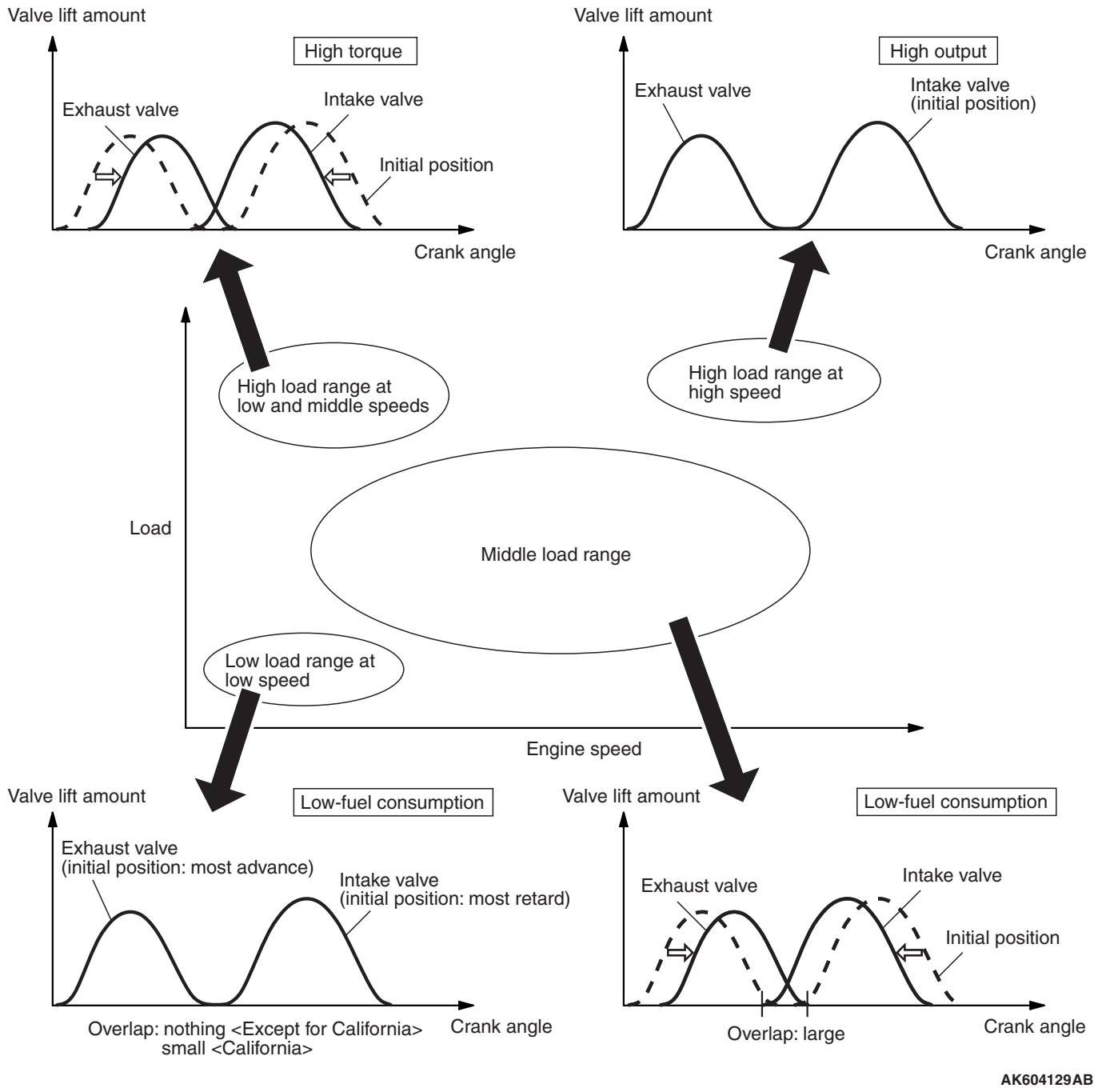

Operation condition	Valve timing	Operation	Effectiveness
Within range of low speed and low load at idle	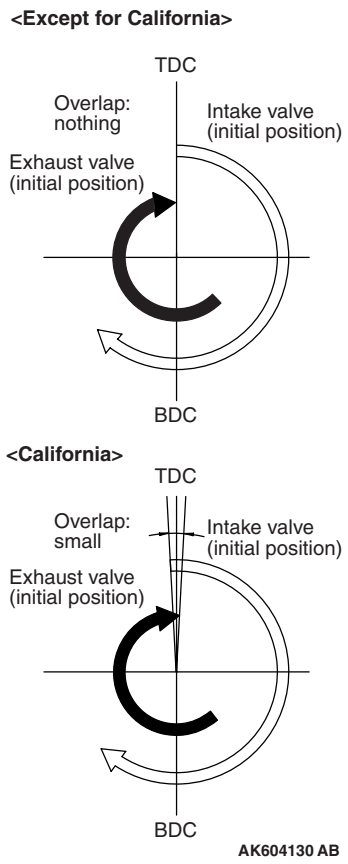	Overlap is decreased and amount of exhaust gas flowing back into intake port is limited.	Idle speed stable

Operation condition	Valve timing	Operation	Effectiveness
Within range of low speed and high load at acceleration	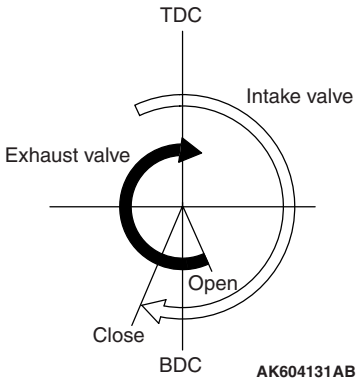	Advancing closing timing of intake valve allows amount of intake air flowing back into intake port to be limited as well as allows volumetric efficiency to be improved, resulting in low and middle speed torques improved.	Low and middle speed torques improved
Within range of middle speed and middle load	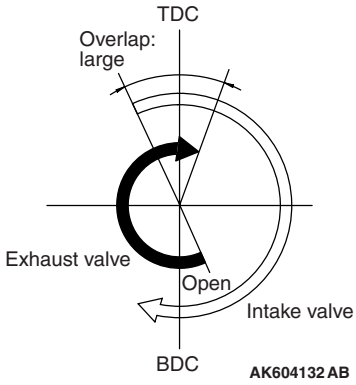	Increasing overlap amount allows pumping loss to be decreased. Retarding opening timing of exhaust valve allows burned gas to work sufficiently and allows cycle efficiency to be improved, resulting in higher expansion ratio.	Fuel economy improved
Within range of high speed and high load	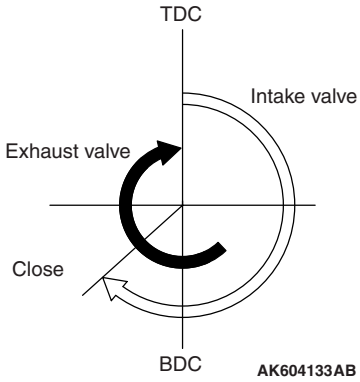	Retarding closing timing of intake valve in accordance with engine speed allows valve timing to be controlled according to inertia force of intake air and allows volumetric efficiency to be improved.	Output improved

MULTIPORT FUEL INJECTION (MFI) RELAY CONTROL

M2132006000173

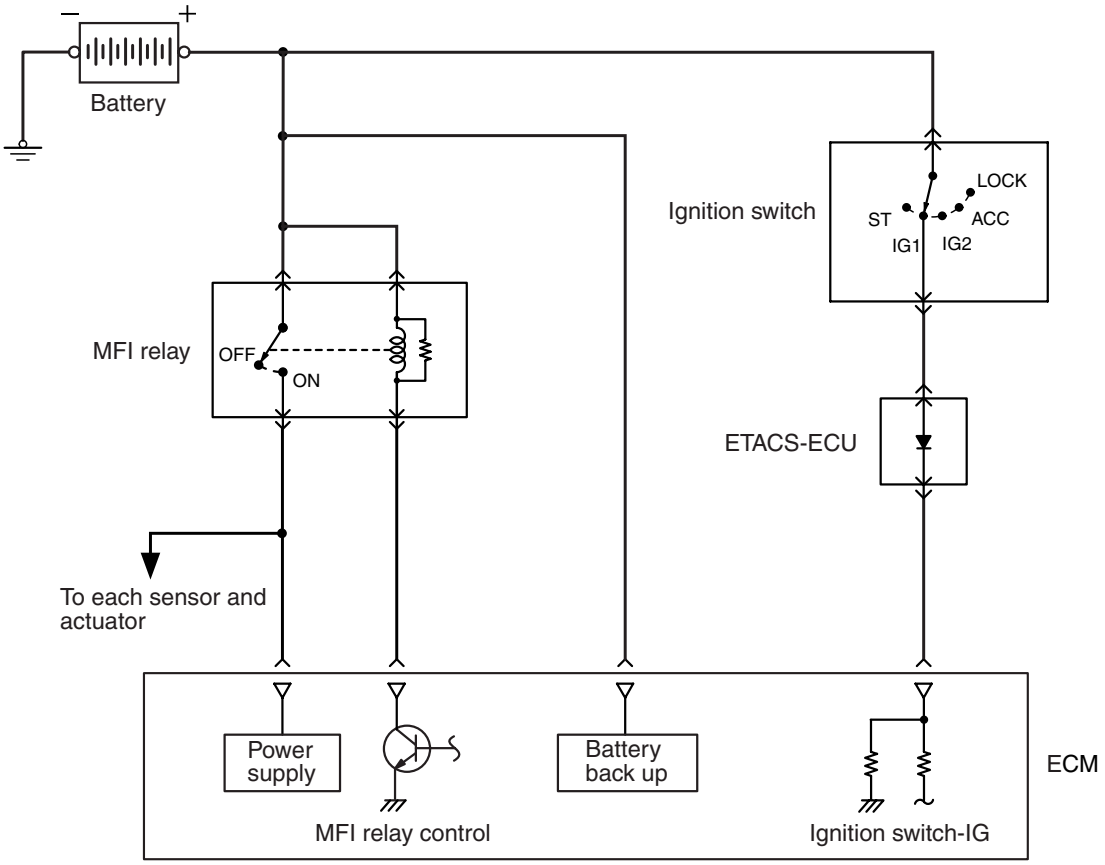

AK604134AB

When the ignition switch-IG "ON" signal is input, ECM turns ON the power transistor for control of the MFI relay. As a result, current flows through the MFI relay's coil, the relay switch turns ON and power is supplied to each sensor and actuator. Also, when ignition switch-IG "OFF" signal is input, ECM performs the following controls and then turns OFF the power transistor for control of MFI relay.

- Throttle valve initializing control

FUEL PUMP RELAY CONTROL

M2132006500208

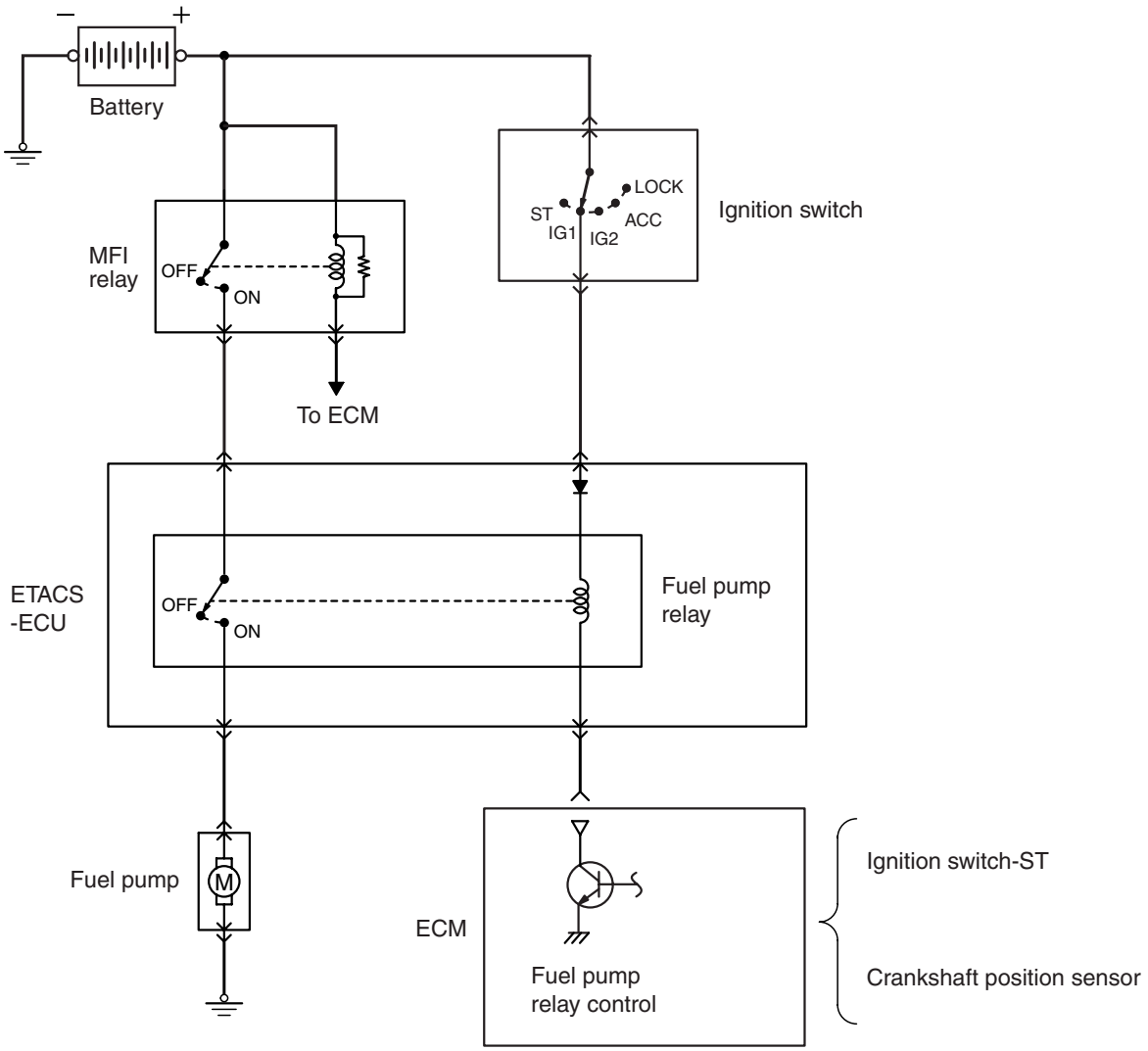

AK604135 AB

When current flows through the fuel pump relay, the relay turns ON and the fuel pump is driven. The fuel pump relay is built into the ETACS-ECU. When the ignition switch-ST signal is input, ECM turns ON the power transistor for control of the fuel pump relay. As a result, power is supplied to the fuel pump. Also, if engine speed falls below a set value, the fuel pump relay is turned OFF. Thus, it deals with sudden stoppages such as engine stalling etc. by stopping the pump.

STARTER RELAY CONTROL

M2132025500092

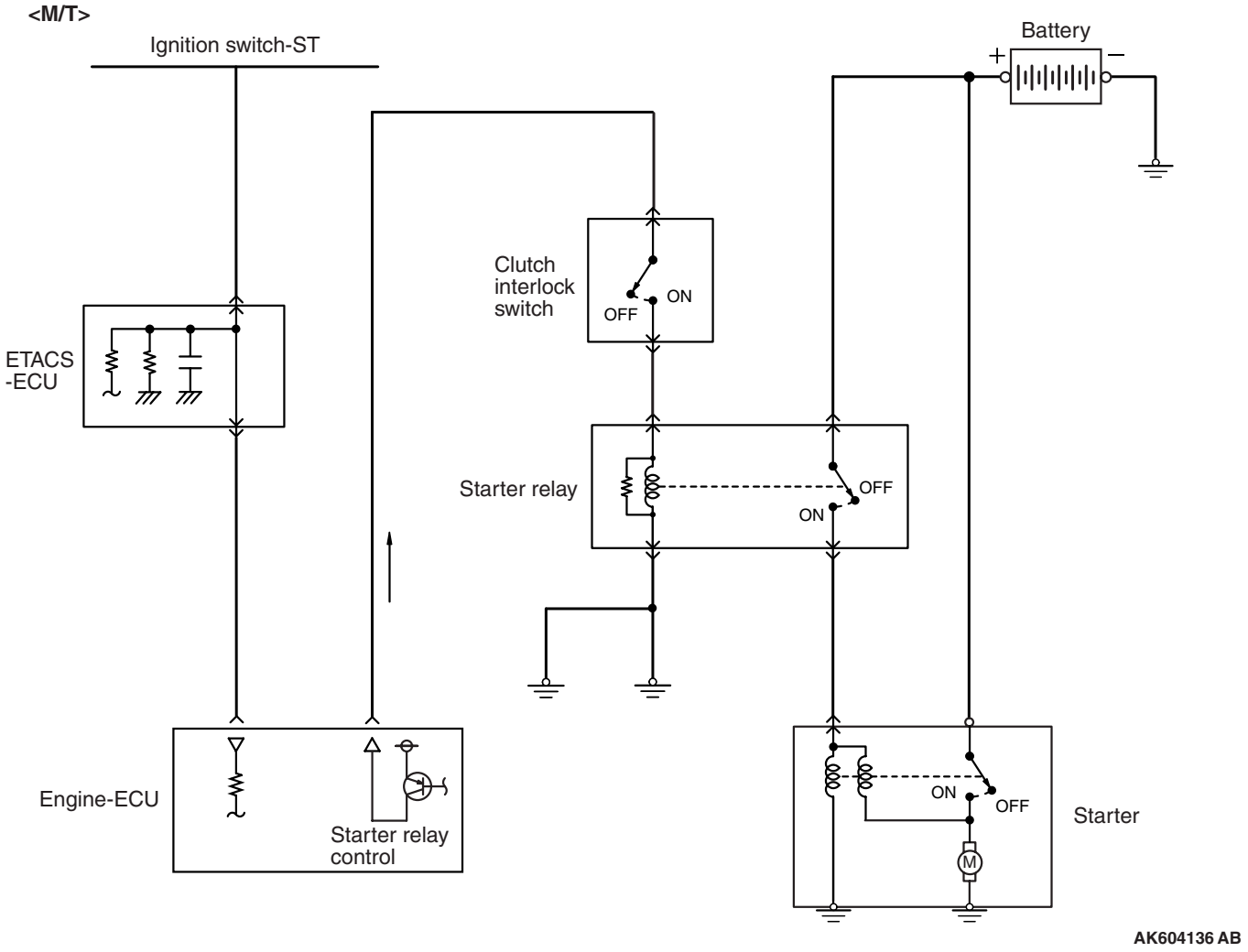

<CVT>

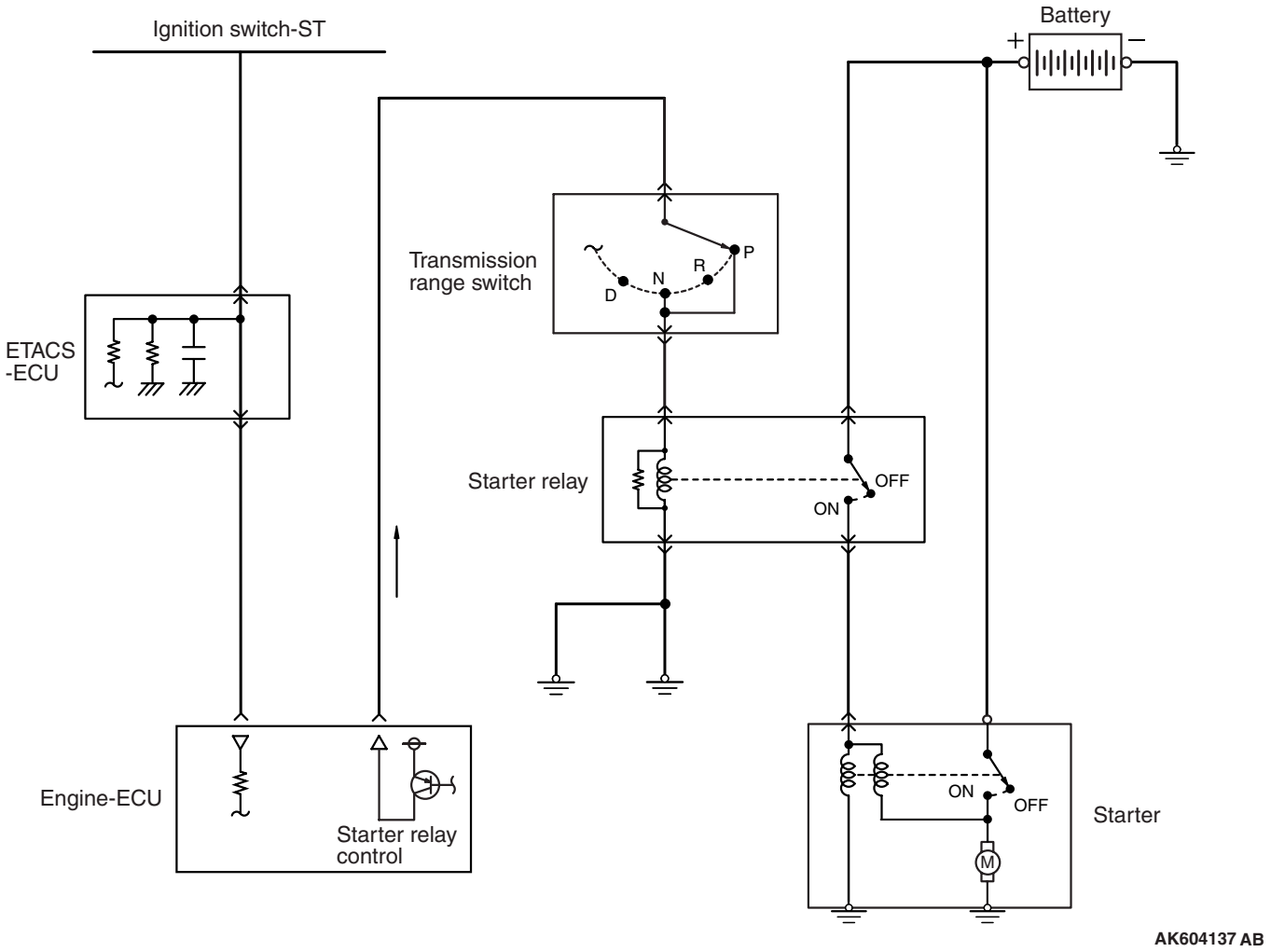

When the ignition switch-ST signal is input, ECM turns ON the power transistor for control of the starter relay.

HEATED OXYGEN SENSOR HEATER CONTROL

M2132007000206

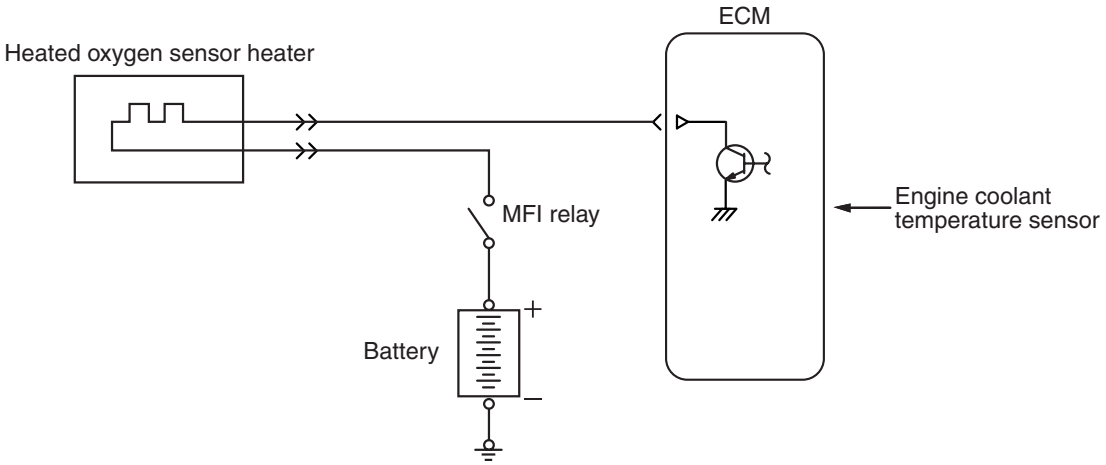

AK602241AD

When exhaust gas temperature is low, the heated oxygen sensor response is dull. So, response is improved by raising the sensor temperature by passing current through the heater at a low exhaust gas temperature, such as in the immediate aftermath of the engine start, or during the warm up operation and in cutting the fuel during deceleration. Based on driving conditions and the heated oxygen sensor activation state, ECM changes the amount of current (duty ratio) to the heater to quicken the activation of the heated oxygen sensor.

A/C COMPRESSOR RELAY CONTROL

M2132034500120

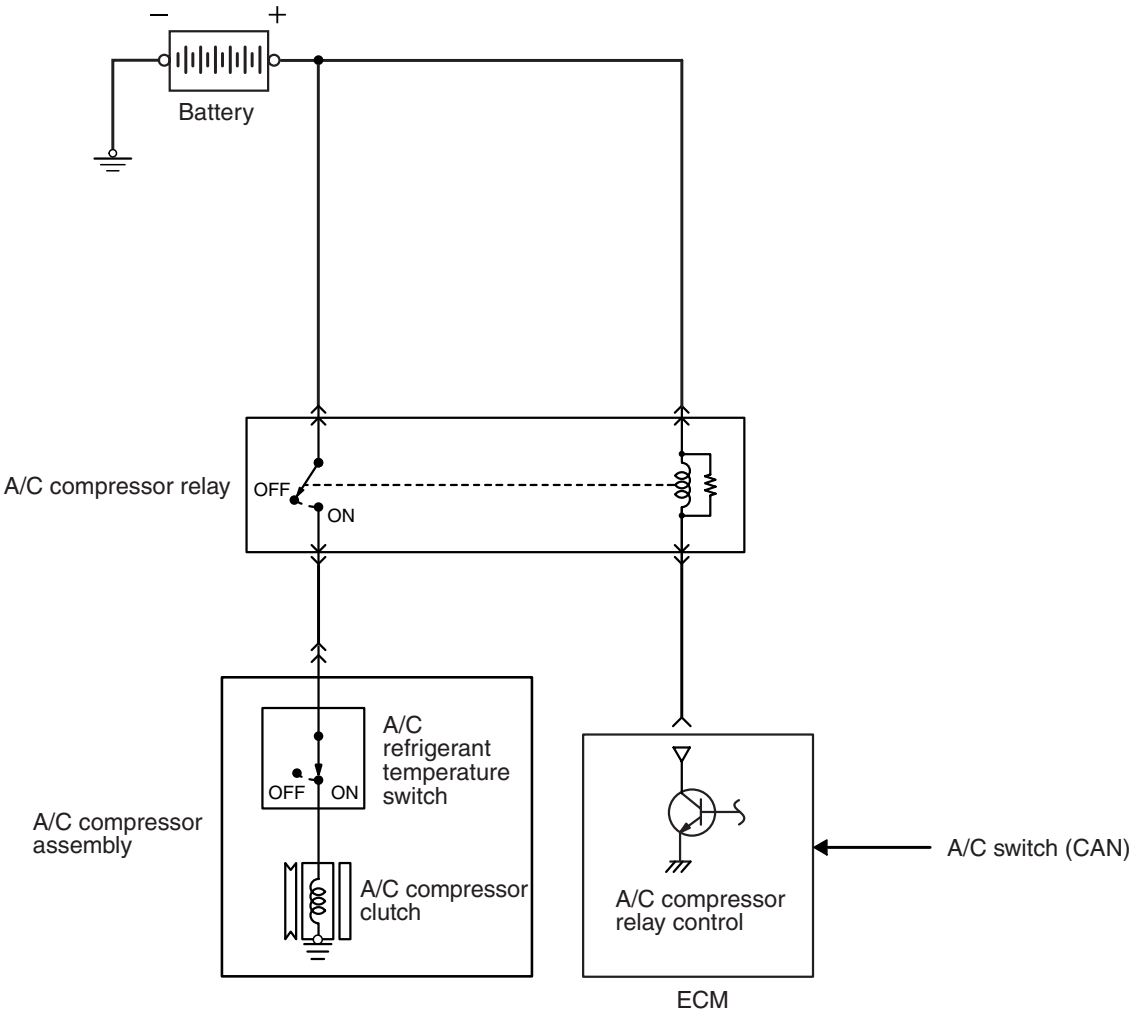

The ECM turns on the power transistor when the A/C switch ON signal is input by the A/C-ECU through the CAN. This allows the A/C compressor relay to be ON and to be operated. During the high load operation, such as the acceleration with the fully opened accelerator, the ECM secures the acceleration capability by turning off the A/C compressor relay for the specified period to produce no load on the A/C compressor.

GENERATOR CONTROL

M2132025000172

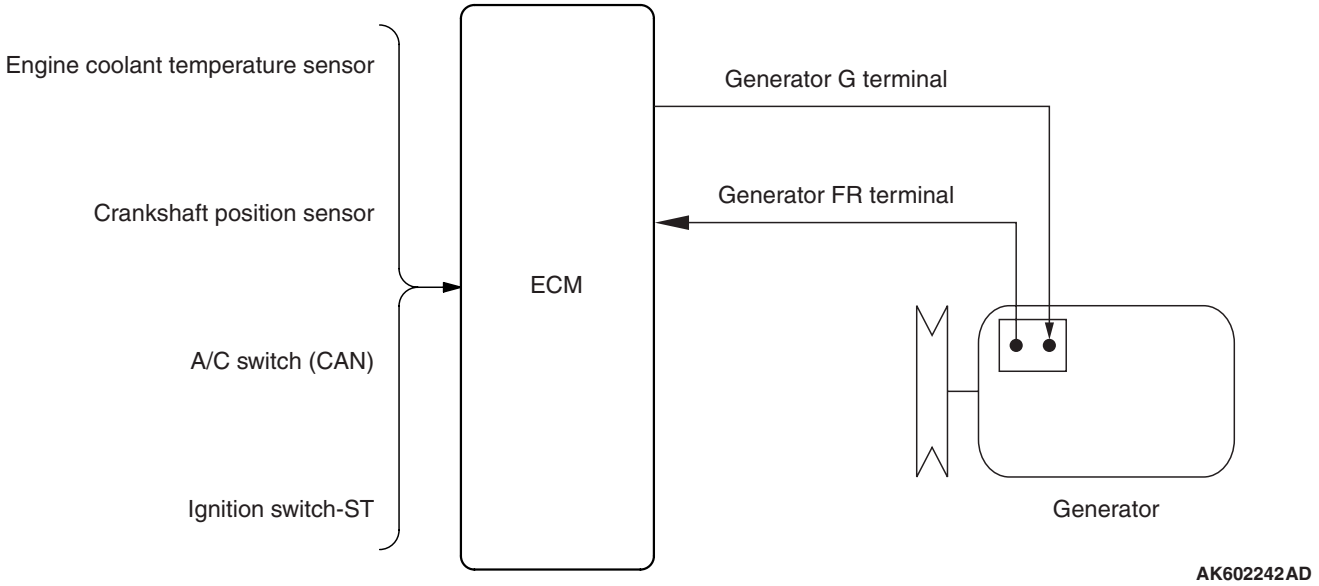

During engine idle operation, ECM controls duty of conduction between generator G terminal and ground. (G terminal duty is controlled to be the same as ON duty of the power transistor inside the voltage regulator). If headlights etc. are turned on while engine is idling, the consumed current increases suddenly, but by gradually increasing the generator G terminal OFF duty, ECM restricts sudden increase in generator's output current and output current is increased only gradually. (Battery current is supplied to the headlamp etc. till generator produces sufficient current.) Thus, ECM prevents change in idle speed due to sudden increase of engine load.

EVAPORATIVE EMISSION CONTROL SYSTEM INCORRECT PURGE FLOW MONITOR

M2132027200019

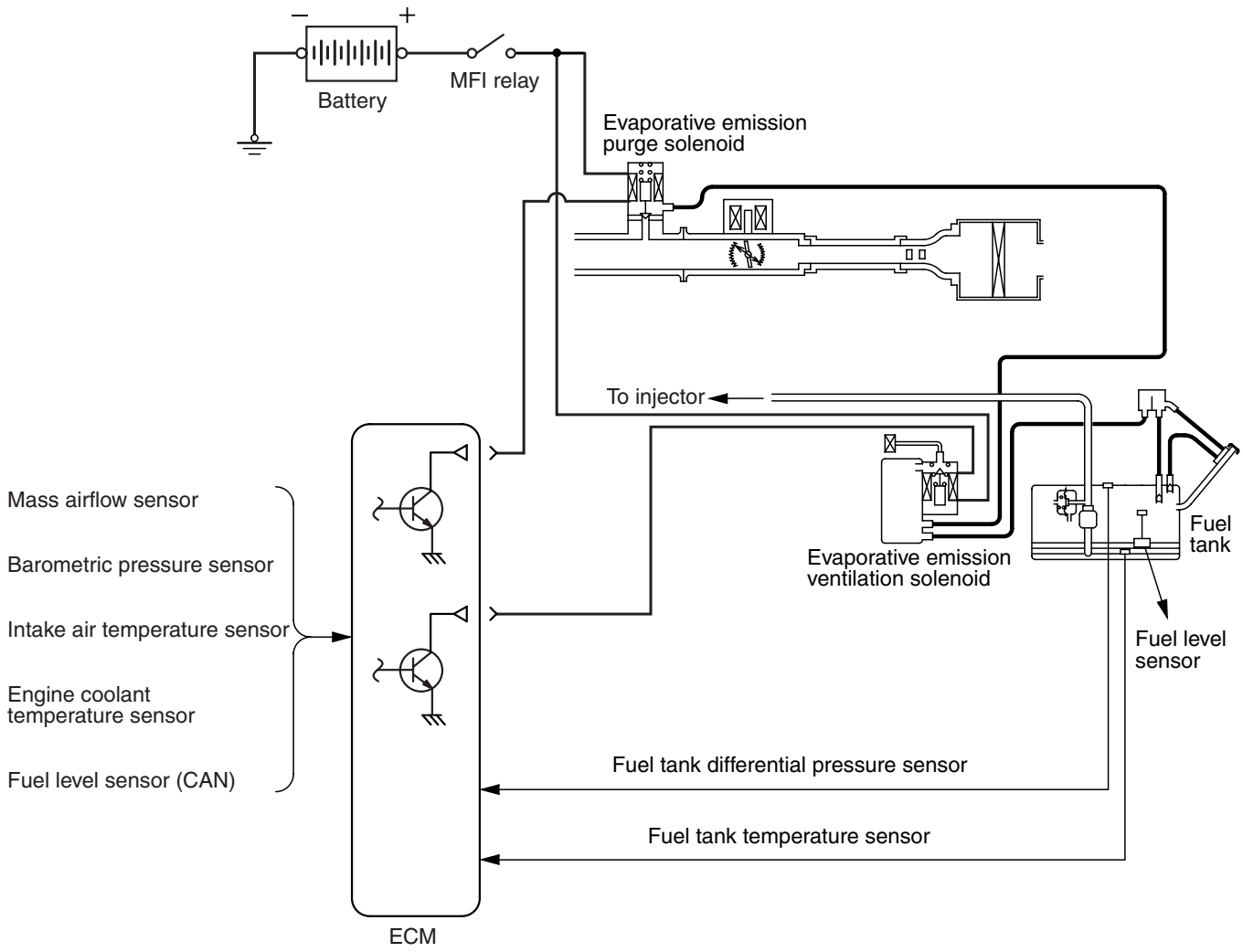

AK604139 AB

The ECM detects whether the fuel vapor leakage exists or not from the evaporative emission control system. By the specified pattern within the certain operation range, the ECM drives the evaporative emission purge solenoid and the evaporative emission ventilation solenoid. This allows slight vacuum to be produced in the fuel tank.

The ECM measures the vacuum condition through the fuel tank differential pressure sensor signal. By comparing the normal (expected) value and the actual value, the ECM detects whether the fuel vapor leakage exists or not from the evaporative emission control system.

GROUP 12

ENGINE LUBRICATION

CONTENTS

GENERAL DESCRIPTION. 12-2
OIL PASSAGE 12-2
OIL FILTER 12-3
OIL PAN 12-3
OIL DIPSTICK, OIL FILLER CAP, OIL DRAIN PLUG 12-4
OIL PUMP 12-4

GENERAL DESCRIPTION

M2120000100249

The lubrication system is a full-flow, filter pumping system.
The engine oil that accumulates in the oil pan is drawn and discharged by the oil pump. After its pressure is regulated by the relief valve, the oil passes through the oil filter. Then, it flows from the oil passage in the cylinder block to the individual crankshaft journals and the cylinder head.
After the oil is pumped to the individual crankshaft journals, it passes through a passage in the crankshaft and is fed to the pins. After the oil is pumped to the cylinder head, it flows to the camshaft journals and the engine oil control valves.

OIL PASSAGE

M2120000200194

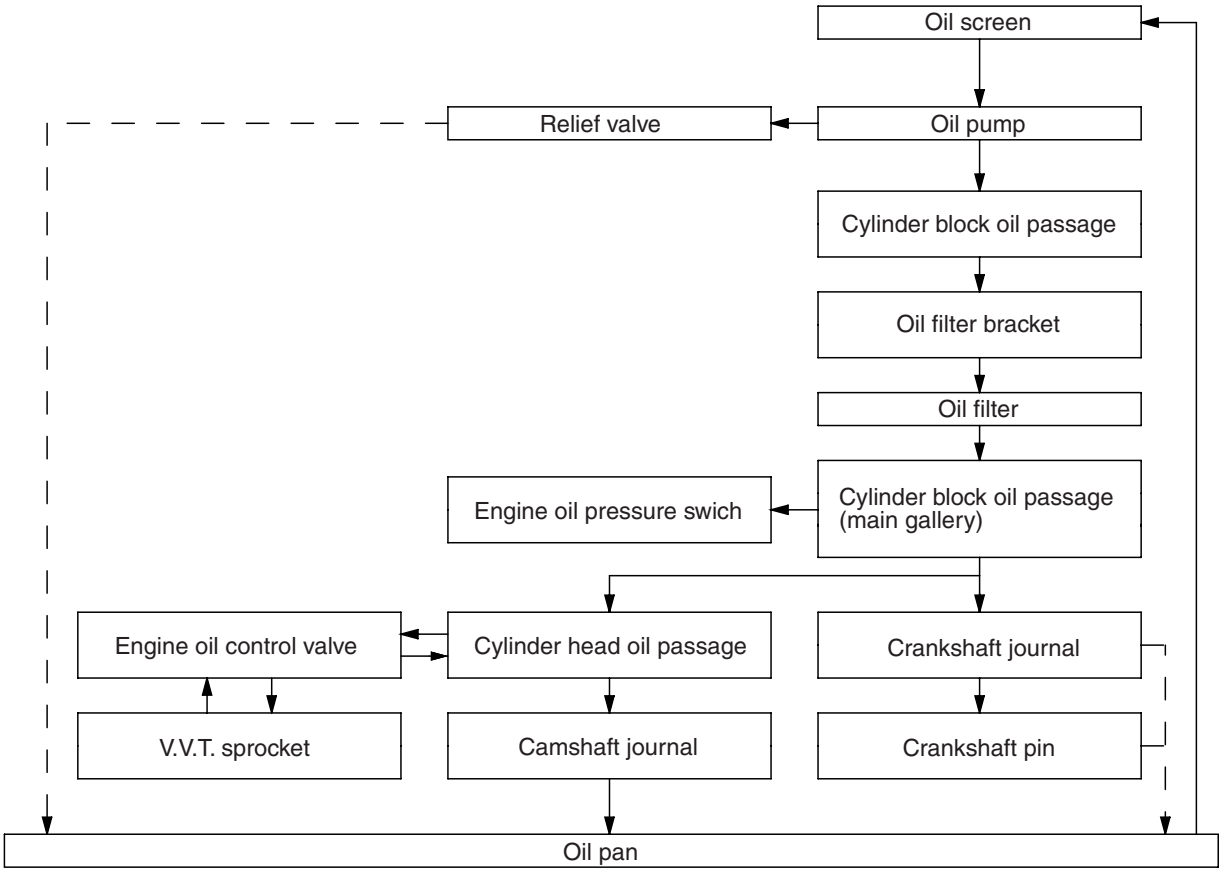

AK603615AB

OIL FILTER

M2120005000195

The oil filter is installed on the left side of the cylinder block.

Item	Specifications
Filtering system	Full-flow filtering, filter paper type
Filtering area m^2	0.11
Rated flow volume L/min	30

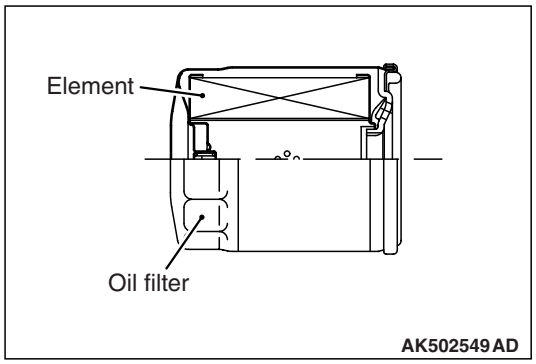

OIL PAN

M2120006000187

The oil pan is made of sheet metal and contains an oil sump in the forward area of the engine.
FIPG (Formed-In-Place Gasket) is used to seal between the oil pan and the ladder frame.

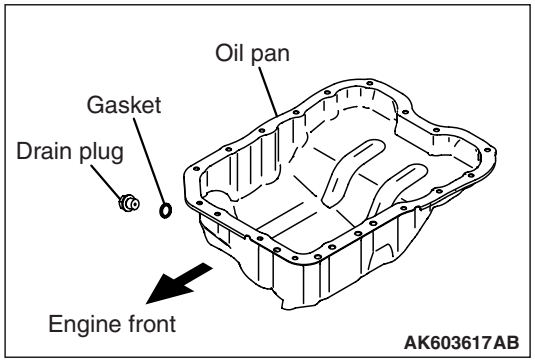

OIL DIPSTICK, OIL FILLER CAP, OIL DRAIN PLUG

M2120007000124

The oil dipstick, oil filler cap, and oil drain plug are located with serviceability in mind.

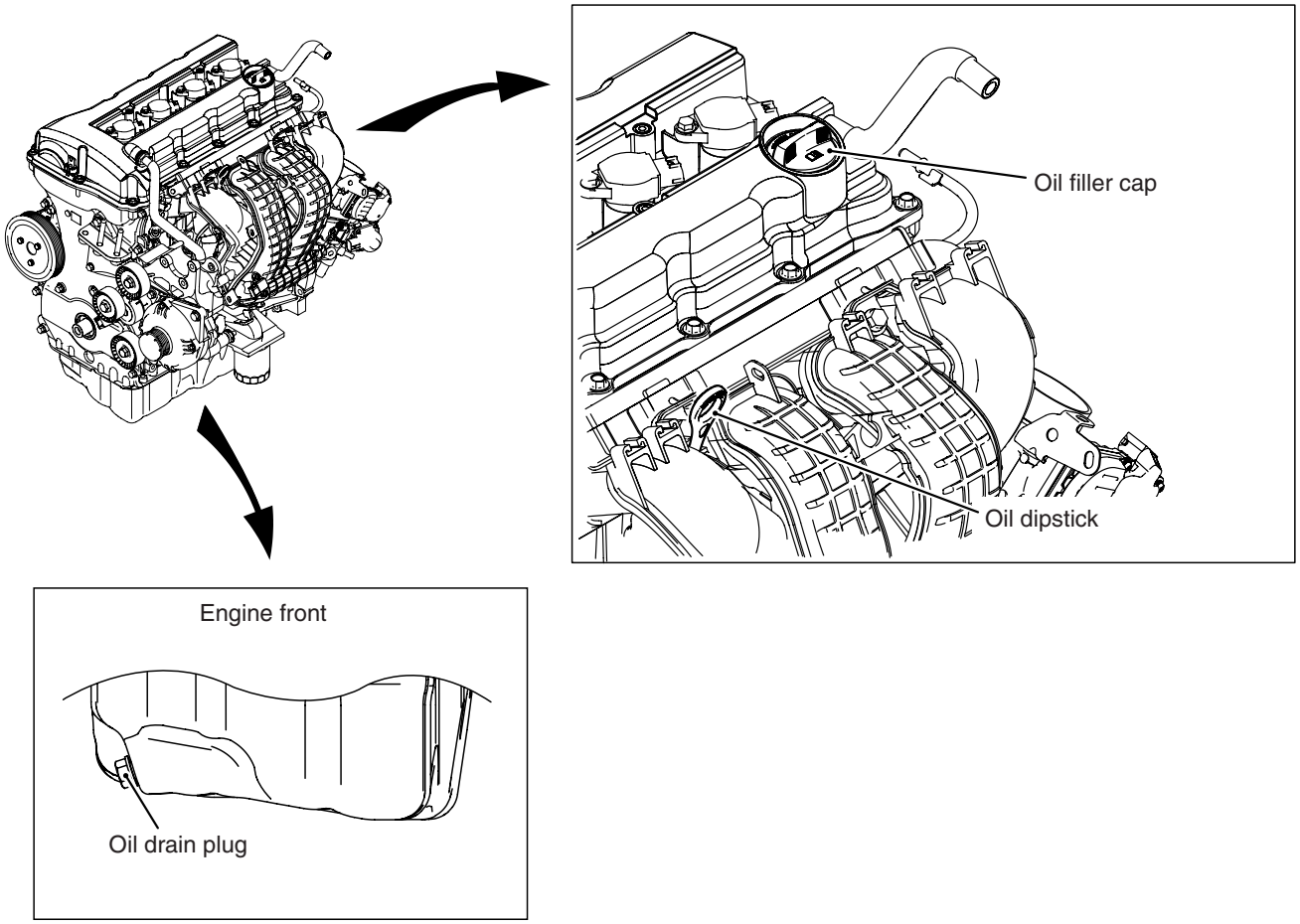

AK503035AD

OIL PUMP

M2120002000077

The oil screen is integrated into the oil pump case to be compact and lightweight.

The oil pump case, which is installed to the bottom of the ladder flame, is driven by the oil pump chain through the oil pump sprocket installed to the front of the oil pump case.